CHEYENNE BOTTOMS STUDENT RESEARCH LAB
KANSAS DEPT. OF WILDLIFE AND PARKS

S1

STEVEN M. HUSY LICENSED PROFESSIONAL ENGINEER 12/6/10

CONSULTANTS

wallace
WALLACE ENGINEERING
STRUCTURAL CONSULTANTS, INC.
818 GRAND BOULEVARD, SUITE 1100
KANSAS CITY, MISSOURI 64106
816-421-8282, FAX 816-421-8338

PROJECT NO.	M9028
DATE:	DEC. 8, 2010
DRAWN BY:	JJM
CHECKED BY:	SLS
SCALE:	AS NOTED
FILE:	

REVISIONS:

BID SET - DEC. 8, 2010

SHEET TITLE:
GENERAL NOTES AND DETAILS

KANSAS WILDLIFE & PARKS

DESIGN PARAMETERS

1. BUILDING CODE ---------- 2006 IBC

2. LIVE LOADS
   ROOF ---------- 20 PSF

3. SNOW LOADS
   A. GROUND SNOW LOAD, Pg ---------- 20 PSF
   B. ROOF SNOW LOAD, Pf ---------- 20 PSF
   C. SNOW EXPOSURE FACTOR, Ce ---------- 0.7
   D. IMPORTANCE FACTOR, I ---------- 1.0

4. WIND LOADS
   A. WIND SPEED (3 SECOND GUST) ---------- 90 MPH
   B. IMPORTANCE FACTOR, I ---------- 1.0
   C. EXPOSURE CATEGORY ---------- C
   D. HEIGHT AND EXPOSURE COEFFICIENT ---------- 1.21
   E. DESIGN WIND PRESSURE ON PRIMARY STRUCTURE (WINDWARD + LEEWARD)
      END ZONES ---------- 17 PSF
   F. DESIGN WIND PRESSURE ON EXTERIOR WALLS
      END ZONES ---------- 24 PSF
      INTERIOR ZONES ---------- 22 PSF
   G. DESIGN UPLIFT PRESSURE ON ROOFS (NET)
      CORNER ZONES ---------- -25 PSF
      EDGE ZONES ---------- -24 PSF
      INTERIOR ZONES ---------- -18 PSF
   H. WIDTH OF EDGE ZONE ---------- 3 FT

GENERAL

1. STRUCTURAL ELEMENTS ARE NON-SELF SUPPORTING AND REQUIRE INTERACTION WITH OTHER ELEMENTS FOR STABILITY AND RESISTANCE TO LATERAL FORCES. FRAMING AND WALLS SHALL BE TEMPORARILY BRACED BY THE CONTRACTOR UNTIL PERMANENT BRACING, FLOOR AND ROOF DECKS, AND WALLS HAVE BEEN INSTALLED AND CONNECTIONS BETWEEN THESE ELEMENTS HAVE BEEN MADE.
2. THE CONTRACTOR IS RESPONSIBLE FOR PROVIDING ADEQUATE TEMPORARY SUPPORT AND STABILITY OF EXISTING STRUCTURE DURING ALL PHASES OF CONSTRUCTION.
3. DO NOT SCALE DRAWINGS.

FOUNDATIONS

1. FOOTING DESIGNS ARE BASED ON AN ASSUMED STABLE, NON-EXPANSIVE SOIL WITH A NET ALLOWABLE SOIL BEARING VALUE OF 1500 PSF. CONTRACTOR SHALL HIRE A GEOTECHNICAL ENGINEER TO DETERMINE WHETHER OR NOT SOIL MEETS THIS MINIMUM CRITERIA AND IF IT DOES NOT, SHALL NOTIFY OWNER SO THAT THE FOUNDATION MAY BE REDESIGNED ACCORDINGLY.
2. EXTERIOR FOOTINGS SHALL BEAR AT OR BELOW MINIMUM BEARING DEPTH. MINIMUM BEARING DEPTH IS 36" BELOW ADJACENT FINISHED GRADE.

CONCRETE

1. REFER TO STRUCTURAL CONCRETE SPECIFICATIONS FOR MINIMUM COMPRESSIVE STRENGTH AND MIX REQUIREMENTS.
2. REINFORCING STEEL SHALL HAVE A MINIMUM YIELD STRENGTH (Fy) OF 60 KSI.
3. "C.J." INDICATES SAW CUT JOINT OR DOWELED CONSTRUCTION JOINT IN SLAB. RE: SPECIFICATIONS FOR ACCEPTED SAW CUT METHODS. SLAB POURS SHALL BE SEPARATED BY A DOWELED CONSTRUCTION JOINT.
4. SAW CUT/CONSTRUCTION JOINTS SHALL BE LOCATED AS SHOWN ON PLANS OR AS DIRECTED BY THE STRUCTURAL ENGINEER.
5. PROVIDE #3 Z-BAR SPACERS AT 24" O.C. EACH WAY FOR CONCRETE WALLS HAVING REINFORCING STEEL IN BOTH FACES.
6. PROVIDE CORNER BARS THAT MATCH CONTINUOUS REINFORCEMENT SIZE AND QUANTITY AT INTERSECTIONS AND CORNERS OF WALLS AND FOOTINGS.

CONCRETE REINFORCING LAP SCHEDULE

BAR NO.	LAP TOP BARS	LAP OTHERS
#3 (10)	17"	16"
#4 (13)	23"	18"
#5 (16)	28"	22"
#6 (19)	34"	26"
#7 (22)	49"	38"
#8 (25)	56"	43"
#9 (29)	69"	54"
#10 (32)	85"	66"
#11 (36)	103"	79"

WOOD FRAMING

1. WOOD FRAMING SHALL MEET THE FOLLOWING MINIMUM STRESS PROPERTIES:
   A. FRAMING 2-4 INCHES THICK, 2 INCHES AND WIDER, SOUTHERN PINE NO. 2 KD15, PER 2005 NDS,
      1. Fb=850 PSI (SINGLE MEMBER USE)
      2. Ft=525 PSI
      3. Fc=1350 PSI (PARALLEL TO GRAIN)
      4. Fc=520 PSI (PERPENDICULAR TO GRAIN)
      5. Fv=180 PSI
      6. E=1,200,000 PSI
2. ALL LOAD BEARING STUDS SHALL BE 2x4 SPF, STUD GRADE, UNO.
3. ALL WOOD SHALL BE IN ACCORDANCE WITH NFPA STANDARD DRESSED (S4S) SIZES.
4. ALL JOIST/BEAM HANGERS SHALL BE AS MANUFACTURED BY SIMPSON STRONG-TIE COMPANY, INC. (1-800-999-5099) OR AN APPROVED EQUAL, UNLESS OTHERWISE NOTED ON THE PLANS.
5. ALL EDGES OF THE ROOF AND FLOOR DECKING AT ANY OPENING SHALL BE SUPPORTED BY A BLOCKING MEMBER THAT SHALL BE A MINIMUM OF A 2x6 SOUTHERN PINE NO. 2 OR BETTER GRADE, U.N.O. ON THE PLANS. CONNECTIONS SHALL BE MADE WITH A JB-SERIES CONNECTOR, NAILED IN ACCORDANCE WITH THE MANUFACTURER'S INSTRUCTIONS.
6. AT CORNERS OF BUILDING AND AT INTERSECTIONS OF BEARING WALLS, PROVIDE FLOOR TIE ANCHOR, LFTA AS MANUFACTURED BY SIMPSON STRONG-TIE COMPANY, INC.
7. ROOF SHEATHING SHALL BE 15/32 STRUCTURAL I RATED SHEATHING EXT. WITH A SPAN RATING OF AT LEAST 24/8. ROOF SHEATHING SHALL BE NAILED AT PANEL EDGES WITH 10d GALVANIZED NAILS AT 6" OC AND 12" OC AT INTERMEDIATE SUPPORTS. BLOCK ALL PANEL EDGES.
8. INSTALL PLYWOOD WITH THE LONG DIMENSION OF THE PANEL PERPENDICULAR TO SUPPORTS U.N.O. AND WITH PANEL CONTINUOUS OVER TWO OR MORE SPANS, STAGGER END JOINTS.
9. UNLESS NOTED OTHERWISE, PROVIDE PRESERVATIVE PRESSURE TREATED WOOD AT THE FOLLOWING LOCATIONS.
   A. SILLS WHICH REST ON CONCRETE OR MASONRY EXTERIOR WALLS.
   B. SLEEPERS AND SILL WHICH REST ON CONCRETE OR MASONRY SLABS WHICH ARE IN DIRECT CONTACT WITH EARTH.
   C. ALL WOOD IN DIRECT CONTACT WITH STEEL.
10. UNLESS NOTED OTHERWISE, REFERENCE IBC TABLE 2306.3.1 AND 2303.3.2 WOOD STRUCTURAL PANEL DIAPHRAGM SCHEDULE FOR MINIMUM NAILING REQUIREMENTS.

NAIL INFORMATION
FOR PLYWOOD SHEATHING AND SIMPSON STRONG-TIE HARDWARE CONTRACTOR MAY USE PNEUMATIC NAILING TOOLS. SIZE OF NAIL SHALL BE GREATER THAN OR EQUAL TO COMMON NAIL SIZES LISTED BELOW:

SIZE	LENGTH	DIA.
6d	2"	0.115"
8d	2 1/2"	0.131"
10d	3"	0.148"
12d	3 1/4"	0.148"
16d	3 1/2"	0.165"

STRUCTURAL STEEL

1. STRUCTURAL STEEL SHALL MEET THE FOLLOWING MINIMUM YIELD STRENGTHS:

	YIELD	ASTM SPEC.
A. W, WT SHAPES:	50 KSI	A992
B. OTHER SHAPES, BARS AND PLATES:	36 KSI	A36
C. STRUCTURAL STEEL TUBING:	46 KSI	A500, GRADE B
D. STRUCTURAL STEEL PIPE:	35 KSI	A53, GRADE B OR A500, GRADE B
E. ANCHOR RODS:	36 KSI	F1554
F. ALL-THREAD RODS:	36 KSI	A36
G. HEADED STUD ANCHORS:	60 KSI	A108, GRADES 1010-1020

2. BOLTS FOR STEEL BEAM AND COLUMN CONNECTIONS SHALL BE 3/4" DIAMETER ASTM A325 HIGH-STRENGTH BOLTS INSTALLED SNUG TIGHT, UNLESS NOTED OTHERWISE.
3. WELDING SHALL MEET ANSI, AWS D1.1, STRUCTURAL WELDING CODE. ELECTRODES FOR WELDING SHALL BE 70 KSI, LOW HYDROGEN.

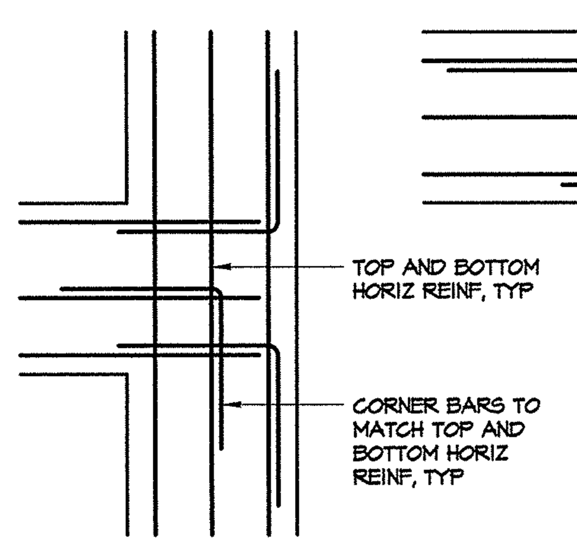

10 FOOTING CORNER BARS
SCALE: 3/4" = 1'-0"

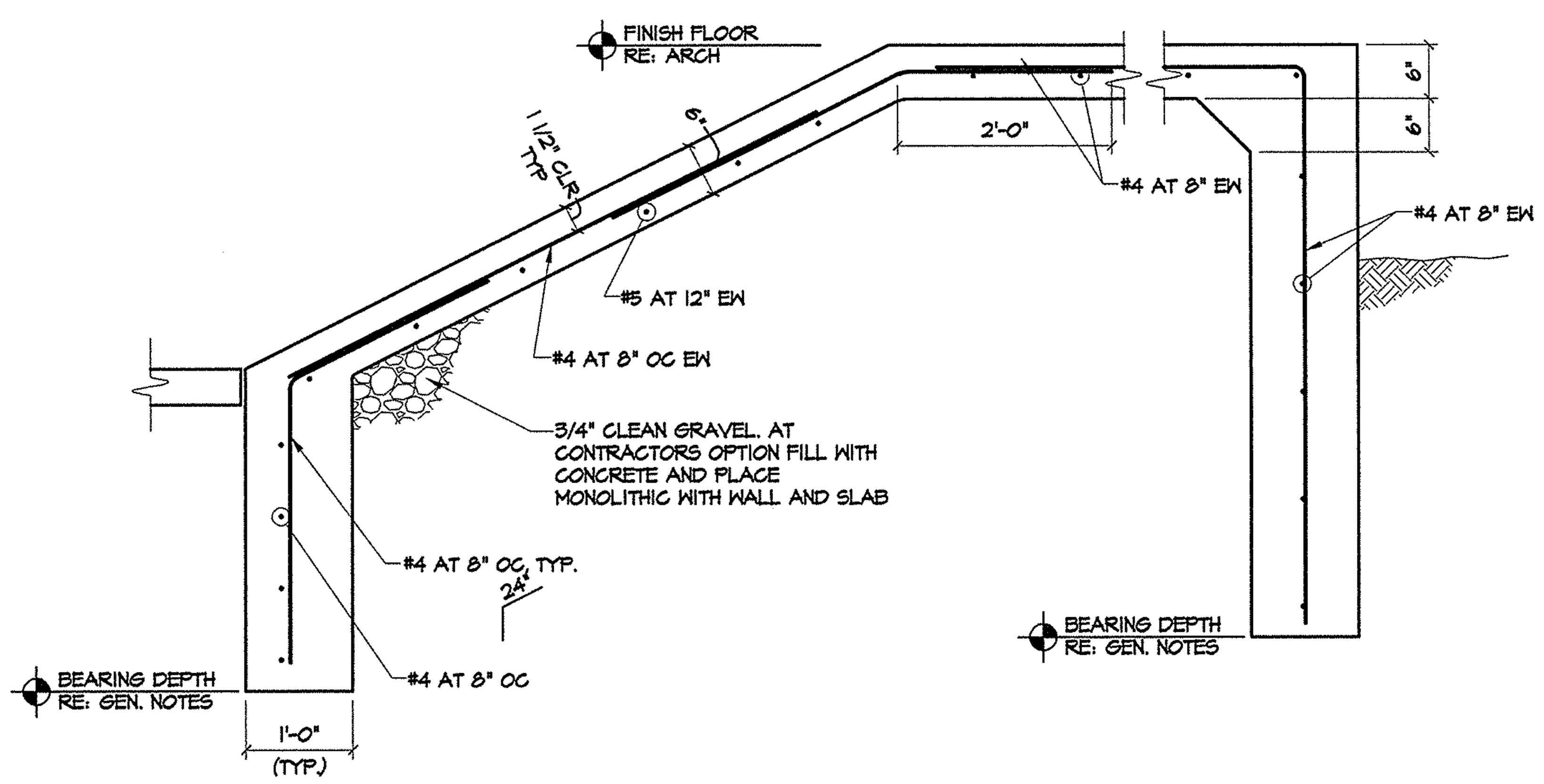

9 EXTERIOR RAMP DETAIL
SCALE: 3/4" = 1'-0"

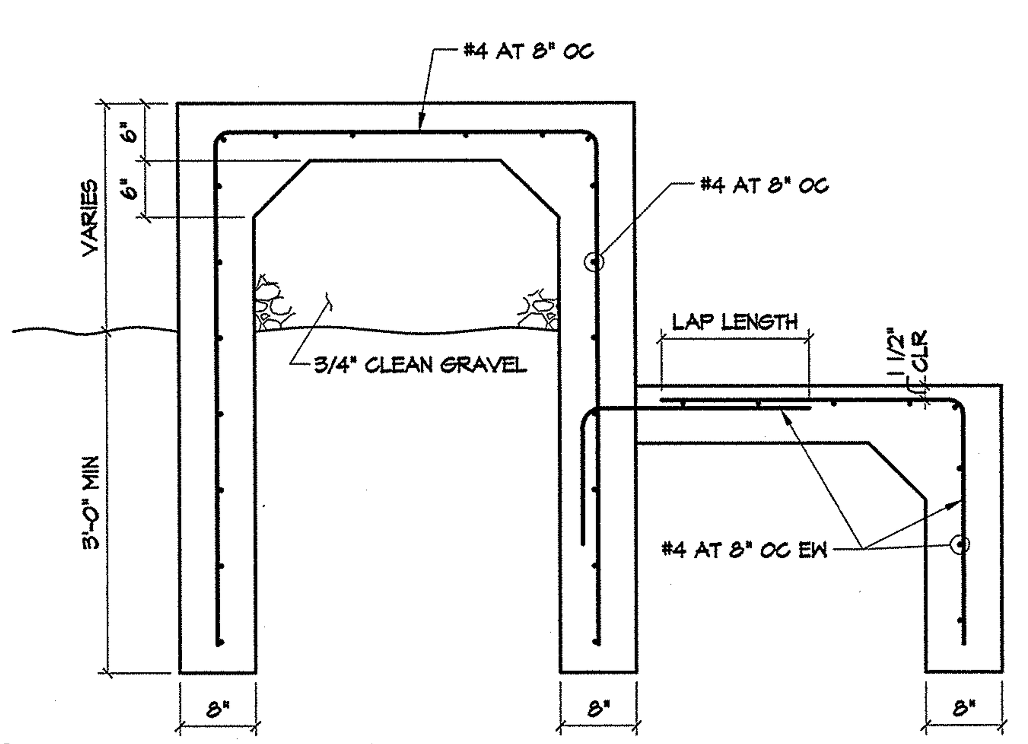

8 EXTERIOR RAMP SECTION
SCALE: 3/4" = 1'-0"

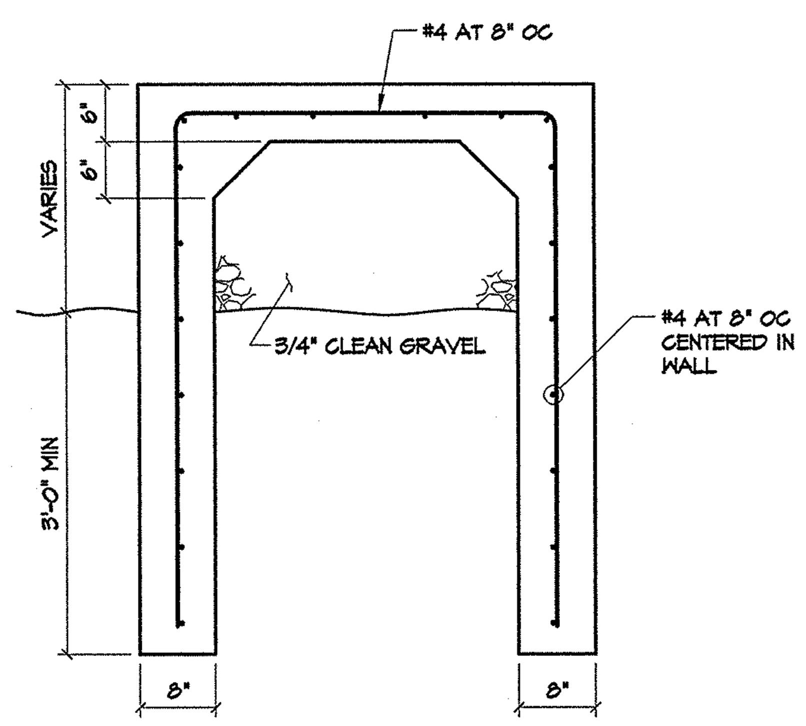

7 EXTERIOR STAIR SECTION
SCALE: 3/4" = 1'-0"

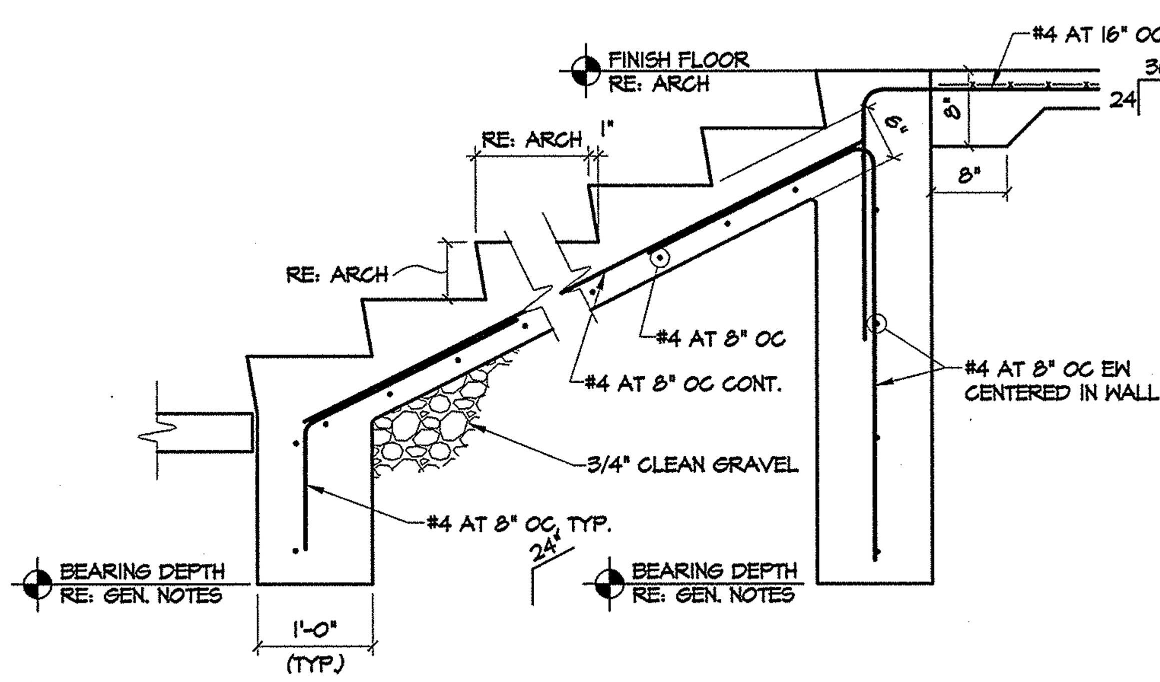

6 EXTERIOR STAIR DETAIL
SCALE: 3/4" = 1'-0"

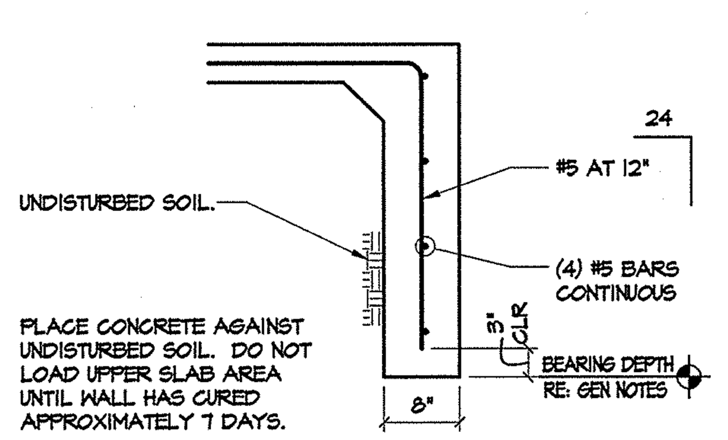

5 SLAB TURNDOWN DETAIL
SCALE: 3/4" = 1'-0"

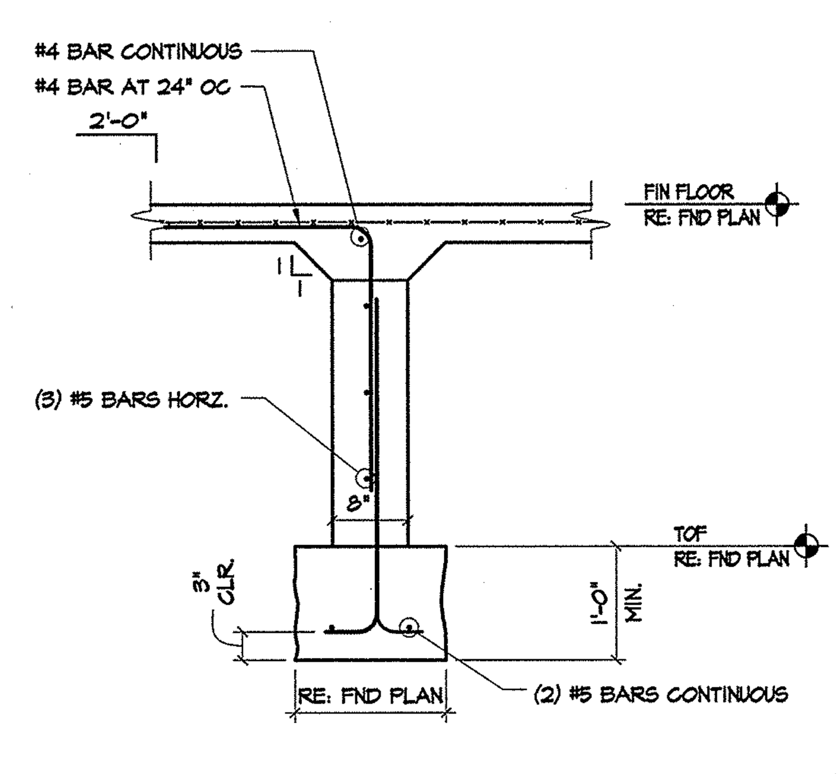

4 FOUNDATION DETAIL
SCALE: 3/4" = 1'-0"

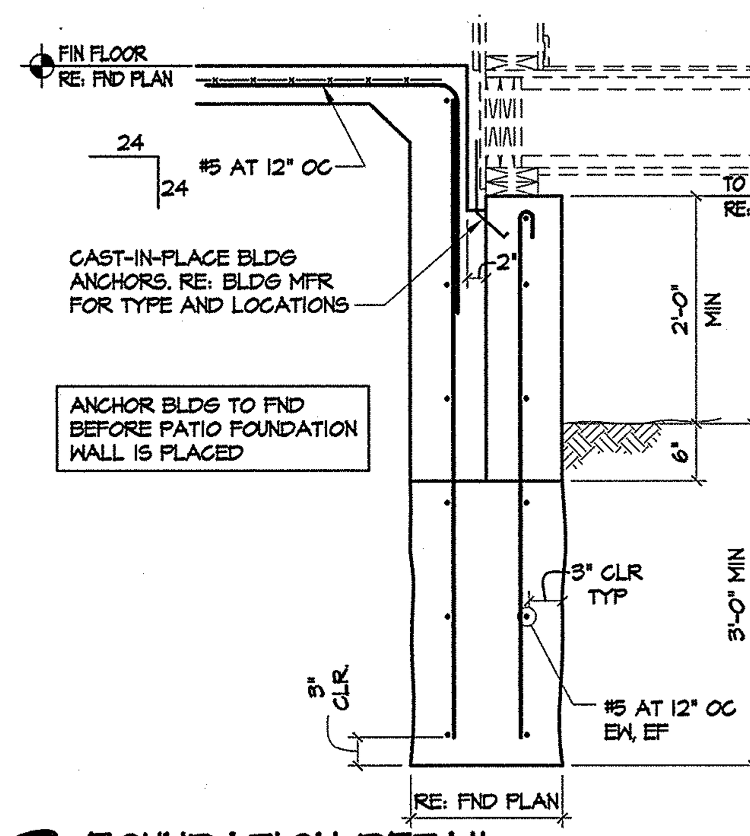

3 FOUNDATION DETAIL
SCALE: 3/4" = 1'-0"

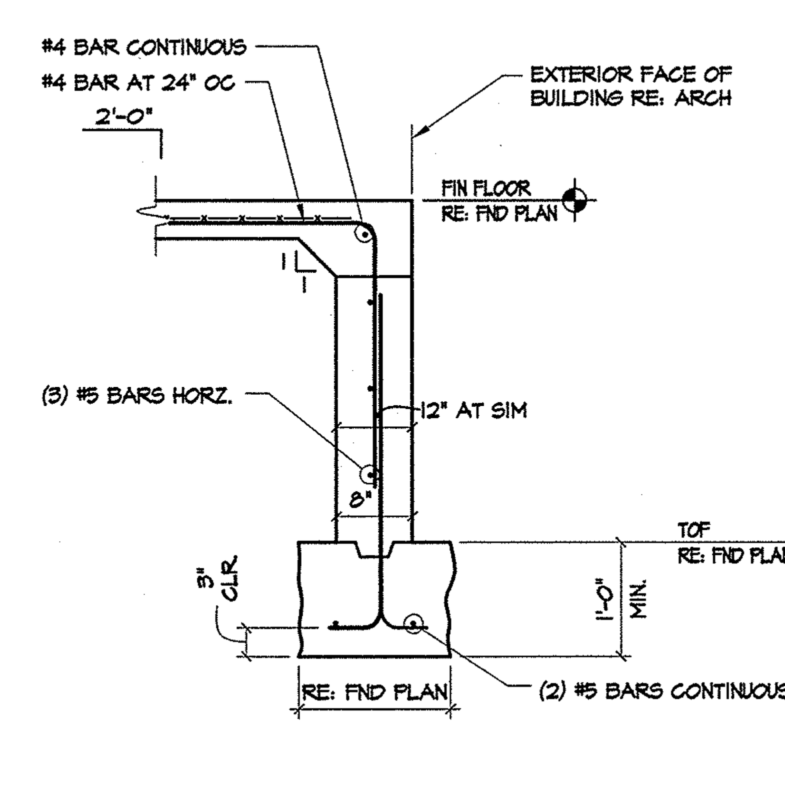

2 WALL FOOTING DETAIL
SCALE: 3/4" = 1'-0"

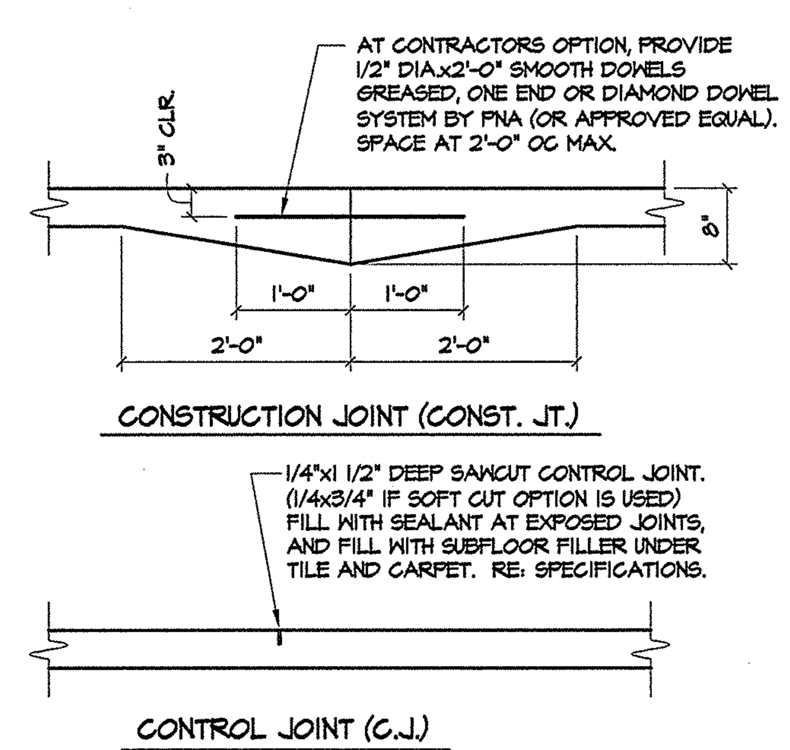

1 SLAB CONTROL JOINT
SCALE: 3/4" = 1'-0"