KANSAS DEPARTMENT OF HEALTH AND ENVIRONMENT
ENVIRONMENTAL SERVICES CONTRACT
REQUEST FOR PROPOSAL
ATTACHMENTS A – G

Attachment A:	Cost Sheet
Attachment B:	Federal Bidding Requirements
Attachment C:	Standard Monitoring Well Design
Attachment D:	Drilling and Direct Push Probe Procedures
Attachment E:	KDHE Laboratory Certification
Attachment F:	Forms
Attachment G:	KDHE Ordering Officers

ATTACHMENT A

ENVIRONMENTAL SERVICES CONTRACT
COST SHEET

COST SHEET

Vendors shall list rates for staff and resources on the following pages. Vendor selection will be based, in part, on overall capabilities. KDHE encourages all interested Vendors to be as inclusive as possible to indicate a better representation of their capabilities and allow KDHE to provide a more objective review.

Because of the nature of the projected scopes of work to be performed under this contract, at a minimum, the Vendor will be required to complete all line items in Sections 1 through 5 of this Attachment, unless otherwise indicated ("*"), in order for a review to be performed. The Vendor may complete Sections 6 through 8 as applicable for the corresponding request for proposal (RFP) module or modules they choose to bid. <u>However, if a Vendor chooses to bid only on Module C: Risk Assessment, Section 8 of Attachment A will be the only requirement</u>.

1. Labor classifications

The Vendor shall state a firm, fixed price per hour for the following labor classifications:

- Professional 5 Associate Level (contract management, associate level review of projects)
- Professional 4 Senior Level (senior project management, licensed professional engineer, licensed professional geologist)
- Professional 3 Design Level (design engineer)
- Professional 2 Project Level (project manager, project geologist)
- Professional 1 Staff Level (staff engineer, field geologist, environmental scientist, health and safety supervisor)
- Technical 4 Senior Technician (construction foreman, sr. environmental technician)
- Technical 3 Technician (environmental technician, remediation technician)
- Technical 2 Drafting/CAD (draftsman)
- Technical 1 Clerical

Labor rates shall be inclusive of all overhead charges, administrative costs and profit. For staff performing field activities, labor rates shall further include Level D PPE. Rates will be listed for actual staff employed by the Vendor at the time of the bid submission.

CLASSIFICATION	RATES PER HOUR			
	INITIAL 2 YEARS	OPTION YEAR 3	OPTION YEAR 4	OPTION YEAR 5
Professional 5	$95	$98	$101	$104
Professional 4	$90	$93	$96	$99
Professional 3	$ 105	$ 108	$ 111	$ 115
Professional 2	$90	$93	$96	$99
Professional 1	$85	$88	$91	$94
Technical 4	$80	$82	$84	$87
Technical 3	$60	$62	$64	$66
Technical 2	$50	$52	$54	$56
Technical 1	$50	$52	$54	$56

A statement of qualification shall be provided for each staff member associated with a particular classification(s). Licensed Professionals must meet the State of Kansas Board of Technical Professions

requirements. All other professionals, at a minimum, shall have a bachelor's degree in an environmental field of study to be considered a "Professional." The official station location must also be defined for each staff member. For personnel and equipment mobilizations from out of state, reimbursement for travel time and mileage is expected to begin at the office closest to the site unless approved by KDHE.

KDHE shall reimburse on a "straight time" basis, therefore the Vendor should schedule to minimize overtime liabilities. The minimum time increment claimed for reimbursement shall be one quarter of an hour.

KDHE shall reimburse for the scope of work performed, not by the Vendor's staff title. For example, the same staff member may perform Project Geologist work to coordinate all project activities, perform site supervision as a Field Geologist and collect groundwater samples as an Environmental Technician. This staff member would bill hours at three different labor rates as defined above. Another example would be a licensed Engineer who bills at Design Engineer rates for remedial system design and as a Staff Engineer while performing routine field activities.

1.1 Per Diem

The Vendor shall state a firm, fixed price per diem for a single person as well as multi person drill crews. Lodging, food, and expenses shall be included in the per diem rate. Per diem is only applicable if an overnight stay is required. The per diem rate also applies to any subcontractors as indicated below.

VENDOR	RATE PER DAY
Single Person	$ 125
SUBCONTRACTOR	**RATE PER DAY**
Single Person	$ 125
Two Person Field Crew	$ 240
Three Person Field Crew* (optional)	$ 360

There will be no labor charge for standby when it is necessary for a Vendor to remain on site, e.g., over the weekend. KDHE assumes that once site activities are initiated, work will continue onsite until completed. If work activities on long term projects must be interrupted for weekends, additional mobilizations will not be allowed without prior agreement and approval by KDHE. Per diem rates will be in effect. Lodging receipts will be required if per diem is requested.

2. Equipment rental and material supply

The Vendor shall state a firm, fixed price per hour, per day, per week, per month and/or per mile as specified for the equipment and materials listed in this attachment. The Vendor is expected to stock standard equipment normally used to complete the tasks and activities identified in this RFP. Any overhead charges or pass-through costs must be built into the line item rates.

Miscellaneous supplies and minor items of equipment are considered to be part of the Vendor's inventory to perform business and are not considered reimbursable. In order for miscellaneous supplies to be considered for reimbursement, prior approval must be received in writing from the KDHE Ordering Officer and the item purchased will be reimbursed for cost plus the applicable surcharge rate described below. Detailed (itemized and dated) invoices must be submitted for KDHE to consider reimbursement for any item purchase.

The listing of equipment and material on the following pages may be expanded by KDHE depending on site requirements. The Vendor may also submit a supplemental listing of equipment available that may be applicable to perform work outlined in this RFP. Any supplement equipment listing provided must include line items rates.

The Vendor must ensure that all equipment (rented or owned by the Vendor) is in proper working order prior to mobilization to a site. KDHE will not pay labor, travel costs, or per diem in situations where the

Vendor arrives at a site with equipment that is not in proper working order. Equipment or other items not listed in the below line items will be reimbursed at cost plus the following surcharge rates. The surcharge rate will be applied to the project total not on individual line items. The Vendor shall obtain a minimum of three written bids for purchases made or subcontracted that are in excess of $500.00 per item, unless otherwise specified by KDHE in the specific work request. A detailed invoice for all rental equipment must be submitted to KDHE for reimbursement consideration.

SURCHARGE DESCRIPTION	SURCHARGE PERCENTAGE
Items less than $5,000	10%
Items between $5,000 and $25,000	8%
Items greater than $25,000	6%

Prices listed in this attachment represent not to exceed amounts. The Vendor may utilize lower line item costs when preparing proposals for specific scopes of work. If a lower line item amount is awarded with a proposal, that amount will represent the maximum allowable reimbursement.

SUPPORT VEHICLE	COST PER MILE	COST PER DAY	COST PER WEEK
Automobile	$ .60	$ 100	$ 400
Light Duty Pickup	$ 1.00	$ 125	$ 500
Heavy Duty Pickup[1]	$ 1.50	$ 150	$ 600
	$	$	$
	$	$	$

[1] *- ¾ ton or larger and includes use of a trailer.*

Support vehicle rates quoted above shall include all maintenance, fuel, insurance and incidental fees and charges such as parking and tolls. The Vendors will be reimbursed a daily or weekly vehicle use rate plus mileage. Daily and weekly use rates shall include local mileage while performing the job duties. Mileage will be reimbursed for mobilization from the official station of the vehicle to and from the job site according to Google® Maps or similar mapping tool.

PROTECTIVE CLOTHING	COST PER PERSON PER DAY
Level A	$ 750
Level B	$ 400
Level C	$ 100

Note: Costs associated with Level D PPE shall be covered with the labor rates and per well sampling costs.

EQUIPMENT RATE	COST PER DAY	COST PER WEEK	COST PER MONTH
Drum (55 gallon)	$ 60	$ 60	$ 60
Photoionization Detector (10.2 to 11.6 eV)	$ 94	$ 280	$ 841
X-Ray Fluorescence (XRF) Analyzer	$550	$ 1650	$ 4950
LEL Meter	$ 94	$ 280	$ 841

Dissolved Oxygen Meter	$ 75	$ 175	$ 500
Oxygen/Carbon Dioxide Meter(s)	$ 94	$ 280	$ 841
Colorimetric Tube Pump	$ 20	$ 50	$ 140
GAC Drum	$ 50	$ 200	$ 300

Purchase-only Equipment	**COST**	**COST**	
Colorimetric Tubes	**PER TUBE**	**PER BOX OF 10**	
Draeger Tubes, CO_2	$ 10	$ 65	
Draeger Tubes, O_2	$ 10	$ 65	
Draeger Tubes, TPH	$ 10	$ 65	
Tedlar Bags	$ 20		
Drum (55 gallon)	$ 65		

Well sampling	COST
Non-dedicated Standard Well Sampling Equipment[1] (disposable bailers, line, gloves, etc.)	$___18_____PER WELL
Non-dedicated Low-Flow Well Sampling Equipment[1] (tubing, pump, meters, gloves, etc.)	$___25_____PER WELL
Well Sampling w/Hydrasleeves and Supplies (gloves, line, etc.)	$___60_____PER WELL
Well Sampling Supplies w/Dedicated Equipment* (gloves, etc.)	$__NO BID_____PER WELL

1 - Well sampling equipment rates shall include electronic water level indicator, interface probe, submersible pumps, peristaltic pumps, bladder pumps, tubing, and filters as necessary. Rates above also include ice, coolers, sample containers, etc. that may not be covered with the analytical costs.

MISCELLANEOUS ITEMS*	**COST PER DAY**	**COST PER WEEK**	**COST PER MONTH**	**PURCHASE**
Water level Indicator	$ 40	$ 160	$ 480	$
Jackhammer	$ 95	$ 350	$	$
Poly tank < 300 gallon	$ 45	$ 135	$ 350	$
Generator	$ 100	$ 300	$	$
12 Volt Submersible Pump	$ 75	$ 225	$ 575	$
Power washer	$ 95	$ 285	$ 700	$
Pump, sump	$ 45	$ 135	$ 325	$
Pump, trash	$ 70	$ 210	$ 525	$
Concrete saw	$ 55	$ 165	$ 415	$
Core Machine	$ 150	$ 450	$ 1125	$

Air Compressor (185 cfm)	$ 175	$ 625	$	$
	$	$	$	$
	$	$	$	$
	$	$	$	$
	$	$	$	$
	$	$	$	$

*OPTIONAL EQUIPMENT RATES – Includes mobilization and labor

HEAVY EQUIPMENT*	COST PER HOUR	COST PER DAY	COST PER WEEK
Bobcat*	$ 70	$ 300	$ 1000
Back Hoe*	$	$	$
Grader*	$	$	$
Dump Truck*	$	$	$
Vacuum Truck*	$	$	$
Tanker Truck*	$	$	$
Frac Tank*	$	$	$

* = Optional bid item

3. Sampling and Analysis

3.1 Laboratory Analysis

All analysis must be performed by a laboratory with current certification from the Kansas Health and Environment Laboratory (KHEL) Certification Program for those parameters which KDHE offers certification (see Attachment E).

The analytical costs proposed shall be inclusive of all material costs associated with collection, preservation, transportation, analysis, and sample disposal (e.g., sample containers, bags, ice, coolers, shipping costs, etc.). Line item costs must include any markup costs for subcontracting.

PARAMETER	MATRIX	METHOD	TURNAROUND TIME				
			24 HOUR	48 HOUR	72 HOUR	7 DAY	14 DAY
HAZARDOUS WASTE CHARACTERIZATION (SW-846)							
Flash Point	Soil/Water	1010	$100.00	$100.00	$75.00	$50.00	$50.00
	Soil/Water	1020A	$100.00	$100.00	$75.00	$50.00	$50.00
Corrosivity, pH	Water	9040B	$25.00	$25.00	$18.75	$12.50	$12.50
Corrosivity, pH	Soil/Waste	9045C	$37.50	$37.50	$28.13	$18.75	$18.75
Corrosivity toward Steel	Soil/Water	1110	No Bid	No Bid	No Bid	No Bid	No Bid
Reactive Cyanide	Soil/Water	Vol. TC (Ch.7.7.3)	$125.00	$125.00	$93.75	$62.50	$62.50
Reactive Sulfide	Soil/Water		$125.00	$125.00	$93.75	$62.50	$62.50
TCLP Extraction	Soil/Water	1311	$187.50	$187.50	$187.50	$62.50	$62.50
TCLP VOCs	Soil/Water	8260B	Not Available	Not Available	$131.25	$87.50	$87.50
TCLP SVOCs	Soil/Water	8270C	Not Available	Not Available	$318.75	$212.50	$212.50

TCLP Pesticides	Soil/Water	8081B	Not Available	Not Available	Not Available	$137.50	$137.50
TCLP Herbicides	Soil/Water	8151A	Not Available	Not Available	Not Available	$225.00	$225.00
TCLP Metals	Soil/Water	6010D	Not Available	Not Available	$91.88	$61.25	$61.25
TCLP Mercury	Soil/Water	7470A	Not Available	Not Available	$46.88	$31.25	$31.25
SPLP	Soil/Waste	1312	$187.50	$187.50	$187.50	$62.50	$62.50
Paint Filter Liquids Test	Soil/Water	9095	$37.50	$37.50	$28.13	$18.75	$18.75
METALS							
Individual Metals	Soil/Water	6010D	$17.50	$17.50	$13.13	$8.75	$8.75
	Soil/Water	6020B	$30.00	$30.00	$22.50	$15.00	$15.00

PARAMETER	MATRIX	METHOD	TURNAROUND TIME				
			24 HOUR	48 HOUR	72 HOUR	7 DAY	14 DAY
Chromium, hex	Soil/Water	7196A	$75.00	$75.00	$56.25	$37.50	$37.50
	Soil/Water	7199	No Bid	No Bid	No Bid	No Bid	No Bid
	Soil/Water	3500-CR	$75.00	$75.00	$56.25	$37.50	$37.50
Mercury	Soil	7470A	$62.50	$62.50	$46.88	$31.25	$31.25
Mercury	Water	7471B	$62.50	$62.50	$46.88	$31.25	$31.25
Mercury (low level)	Soil/Water	1631	$225.00	$225.00	$168.75	$112.50	$112.50
INORGANICS							
Cyanide, Total	Soil/Water	9010B,C	$110.00	$110.00	$82.50	$55.00	$55.00
	Soil/Water	9012A,B	$87.50	$87.50	$65.63	$43.75	$43.75
Cyanide, Amendable	Soil/Water	9010B,C	$110.00	$110.00	$82.50	$55.00	$55.00
	Soil/Water	9012A,B	$87.50	$87.50	$65.63	$43.75	$43.75
Cyanide, Extraction	Oil/Solids	9013	No Bid	No Bid	No Bid	No Bid	No Bid
Total Organic Halides	Water	9020B	$187.50	$187.50	$140.63	$93.75	$93.75
	Water	9022	$187.50	$187.50	$140.63	$93.75	$93.75
Acid Soluble & Insoluble Sulfides	Soil/Water	9030B	No Bid	No Bid	No Bid	No Bid	No Bid
	Soil/Water	SM4500-S	$62.50	$62.50	$46.88	$31.25	$31.25
Sulfate	Soil/Water	9035	$37.50	$37.50	$28.13	$18.75	$18.75
	Soil/Water	9036	$37.50	$37.50	$28.13	$18.75	$18.75
	Soil/Water	9038	$62.50	$62.50	$46.88	$31.25	$31.25
pH	Soil/Water	9040B	$25.00	$25.00	$18.75	$12.50	$12.50
	Soil/Waste	9045C	$37.50	$37.50	$28.13	$18.75	$18.75
Specific Conductance	Soil/Water	9050C	$37.50	$37.50	$28.13	$18.75	$18.75
Anions By Chromatography	Soil/Water	300	$37.50	$37.50	$28.13	$18.75	$18.75
Phenols	Soil/Water	9065	$112.50	$112.50	$84.38	$56.25	$56.25
	Soil/Water	9066	$87.50	$87.50	$65.63	$43.75	$43.75
Total Recoverable Oil and Grease	Water	9070	$125.00	$125.00	$93.75	$62.50	$62.50
Oil and Grease Extraction	Sludge/ Sediment	9071A	$100.00	$100.00	$75.00	$50.00	$50.00

Cation Exchange Capacity	Soil	9080	$ -	$ -	$ -	$ -	$ -
	Soil	9081	$212.50	$212.50	$159.38	$106.25	$106.25
Chloride	Soil/Water	9250	No Bid	No Bid	No Bid	No Bid	No Bid
	Soil/Water	9251	$50.00	$50.00	$37.50	$25.00	$25.00
	Soil/Water	9252	No Bid	No Bid	No Bid	No Bid	No Bid
	Soil/Water	9056	$37.50	$37.50	$28.13	$18.75	$18.75
Perchlorate	Water	331	$875.00	$875.00	$656.25	$546.88	$437.50
	Water	332	$	$	$	$	$
	Soil/Water	6850	$	$	$	$	$
	Soil/Water	6860	$	$	$	$	$
Nitrogen, Ammonia	Soil/Water	350.1, 350.2 or 350.3	$50.00	$50.00	$37.50	$25.00	$25.00
	Soil/Water	SM 4500	$75.00	$75.00	$56.25	$37.50	$37.50

PARAMETER	MATRIX	METHOD	TURNAROUND TIME				
			24 HOUR	48 HOUR	72 HOUR	7 DAY	14 DAY
Nitrogen, Nitrate	Soil/Water	300	$37.50	$37.50	$28.13	$18.75	$18.75
	Soil/Water	9056	$37.50	$37.50	$28.13	$18.75	$18.75
	Water	353.2 or 353.3	$37.50	$37.50	$28.13	$18.75	$18.75
	Water	352.1	$	$	$	$	$
	Water	SM 4500	$	$	$	$	$
Nitrogen, Nitrite	Soil/Water	9056	$37.50	$37.50	$28.13	$18.75	$18.75
	Soil/Water	300	$37.50	$37.50	$28.13	$18.75	$18.75
	Water	353.2	$37.50	$37.50	$28.13	$18.75	$18.75
	Water	354.1	$	$	$	$	$
Nitrogen, Nitrate + Nitrite	Water	351.3	$	$	$	$	$
	Water	353.2	$37.50	$37.50	$28.13	$18.75	$18.75
Orthophosphate	Water	365.1, 365.2 or 365.4	$75.00	$75.00	$56.25	$37.50	$37.50
Total Phosphorous	Water	365.1, 365.2 or 365.4	$75.00	$75.00	$56.25	$37.50	$37.50
Total Dissolved Solids	Water	160.1	$37.50	$37.50	$28.13	$18.75	$18.75
Total Suspended Solids	Water	160.2	$37.50	$37.50	$28.13	$18.75	$18.75
Biochemical Oxygen Demand (BOD)	Water	405.1	$95.00	$95.00	$71.25	$47.50	$47.50
Chemical Oxygen Demand (COD)	Water	410.2, 410.3, or 410.4	$75.00	$75.00	$56.25	$37.50	$37.50
Hardness	Water	130.1 or 130.2	$62.50	$62.50	$46.88	$31.25	$31.25

Acidity	Water	SM 2310	$50.00	$50.00	$37.50	$25.00	$25.00
Total Organic Carbon (TOC)	Soil/Water	9060	$84 (water) $144 (soil)	$84 (water) $144 (soil)	$63 (water) $108 (soil)	$42 (water) $72 (soil)	$42 (water) $72 (soil)
Alkalinity	Water	SM 2320	$50.00	$50.00	$37.50	$25.00	$25.00
	Water	310.1 or 310.2	$	$	$	$	$
Salinity	Soil/Water	SM 2520	$	$	$56.25	$37.50	$37.50
Turbidity	Water	SM 2130	$	$	$37.50	$25.00	$25.00
PETROLEUM HYDROCARBON							
LRH	Soil	Kansas Modified 8015	$112.50	$112.50	$84.38	$56.25	$56.25
LRH	Water		$112.50	$112.50	$84.38	$56.25	$56.25
MRH	Soil		$137.50	$137.50	$103.13	$68.75	$68.75
MRH	Water		$137.50	$137.50	$103.13	$68.75	$68.75
HRH	Soil		$137.50	$137.50	$103.13	$68.75	$68.75
HRH	Water		$137.50	$137.50	$103.13	$68.75	$68.75
TPH	Air	TO-17	$746.25	$497.50	$310.00	$272.50	$248.75
Viscosity	NAPL	ASTM D-445 A&B	Not Available	Not Available	$187.50	$140.63	$93.75
Density (specific gravity)	NAPL	ASTM 1298	Not Available	Not Available	$87.50	$65.63	$43.75

PARAMETER	MATRIX	METHOD	TURNAROUND TIME				
			24 HOUR	**48 HOUR**	**72 HOUR**	**7 DAY**	**14 DAY**
VOLATILE ORGANIC COMPOUND (VOC)							
Full List (low level)	Soil	8260 SIM	No Bid	No Bid	No Bid	No Bid	No Bid
	Water	8260 SIM	No Bid	No Bid	No Bid	No Bid	No Bid
Full List	Soil	8260	$175.00	$175.00	$131.25	$87.50	$87.50
	Water	8260	$175.00	$175.00	$131.25	$87.50	$87.50
Full List (Terracore or Equivalent)	Soil	5035	N/A	N/A	N/A	N/A	$12.00
Full List	Air	TO-3	$405.00	$270.00	$202.50	$147.50	$135.00
		TO-15	$750.00	$522.50	$326.25	$286.25	$261.25
		TO-15 SIM	$956.25	$637.50	$477.50	$350.00	$318.75
		TO-17 (passive)	$750.00	$522.50	$326.25	$286.25	$261.25
		TO-17 (active)	$750.00	$500.00	$375.00	$275.00	$250.00
EDB	Water	8011	$150.00	$150.00	$112.50	$75.00	$75.00
BTEX, 1,2 DCA, MtBE, Naphthalene,	Water	8260	$87.50	$87.50	$65.63	$43.75	$43.75
BTEX, 1,2 DCA, MtBE, Naphthalene, EDB	Soil	8260	$100.00	$100.00	$75.00	$50.00	$50.00
BTEX, 1,2 DCA, MtBE, Naphthalene,	Air	TO-14A	$750.00	$522.50	$326.25	$286.25	$261.25

EDB							
BTEX, 1,2 DCA, MtBE, Naphthalene, EDB	Air	TO-15	$750.00	$500.00	$375.00	$275.00	$250.00
BTEX, 1,2 DCA, MtBE, Naphthalene, LRH	Water	8260	$125.00	$125.00	$93.75	$62.50	$62.50
Full List, LRH	Water	8260	$287.50	$287.50	$215.63	$143.75	$143.75
BTEX, 1,2 DCA, MtBE, EDB	Air	TO-3	$405.00	$265.00	$165.63	$147.50	$135.00
SEMIVOLATILE ORGANIC COMPOUND (SVOC)							
PAHs	Soil/Water	8270 SIM	$187.50	$187.50	$140.63	$93.75	$93.75
	Soil/Water	8310	$500.00	$500.00	$375.00	$250.00	$250.00
Semi-Volatiles	Soil/Water	8270	$425.00	$425.00	$318.75	$212.50	$212.50
Dioxins & Furans	Soil/Water	8280	$1,750.00	$1,750.00	$1,312.50	$1,050.00	$875.00
	Soil/Water	8290	$1,750.00	$1,750.00	$1,312.50	$1,050.00	$875.00
Carbonyls	Soil/Water	8315A	No Bid	No Bid	No Bid	No Bid	No Bid
Chlorinated Hydrocarbons	Soil/Water	8121	$500.00	$500.00	$375.00	$250.00	$250.00
Nonvolatile Solvents	Soil/Water	8321	No Bid	No Bid	No Bid	No Bid	No Bid
Nitroaromatics	Soil/Water	8091	No Bid	No Bid	No Bid	No Bid	No Bid
Nitroaromatics	Soil/Water	8330	Not Available	Not Available	$475.00	$356.25	$237.50
Tetrazene	Soil/Water	8331	No Bid	No Bid	No Bid	No Bid	No Bid

PARAMETER	MATRIX	METHOD	TURNAROUND TIME				
			24 HOUR	48 HOUR	72 HOUR	7 DAY	14 DAY
SVOCs Capillary Column	Soil/Water	8410	No Bid	No Bid	No Bid	No Bid	No Bid
Semi-Volatiles	Air	TO-13	$1,275.00	$850.00	$637.50	$466.25	$425.00
PESTICIDES, HERBICIDES, PCB							
Organochlorine Pesticides	Soil/Water	8081	Not Available	$275.00	$206.25	$137.50	$137.50
Organophosphorous Pesticides	Soil/Water	8141	Not Available	$350.00	$262.50	$175.00	$175.00
Herbicides	Soil/Water	8151	Not Available	Not Available	$337.50	$225.00	$225.00
	Soil/Water	8321	No Bid	No Bid	No Bid	No Bid	No Bid
PCBs	Soil/Water	8082	$175.00	$175.00	$131.25	$87.50	$87.50
DRINKING WATER							
EDB	Water	504.1	$150.00	$150.00	$112.50	$75.00	$75.00
EDB & DBCP	Water	504.1	$150.00	$150.00	$112.50	$75.00	$75.00
VOCs	Water	502.2	No Bid	No Bid	No Bid	No Bid	No Bid
VOCs	Water	524.2	$225.00	$225.00	$168.75	$112.50	$112.50
Metals	Water	200.7 or 200.8	$16.80 (200.7) $28.80 (200.8)	$16.80 (200.7) $28.80 (200.8)	$12.60 (200.7) $21.60 (200.8)	$8.40 (200.7) $14.40 (200.8)	$8.40 (200.7) $14.40 (200.8)
Mercury	Water	245.1	$62.50	$62.50	$46.88	$31.25	$31.25
Chromium, hex	Water	218.4	$225.00	$225.00	$168.75	$112.50	$112.50

Cyanide	Water	335	$87.50	$87.50	$65.63	$43.75	$43.75
Sulfate	Water	375.2 or 375.4	$37.50	$37.50	$28.13	$18.75	$18.75
Phenol	Water	420.1 or 420.2	$100.00	$100.00	$75.00	$50.00	$50.00
Chloride	Water	325.2 or 325.3	$37.50	$37.50	$28.13	$18.75	$18.75
Perchlorate	Water	314	$ -	$ -	$ -	$ -	$ -
TOC	Water	415.1 or 415.2	$87.50	$87.50	$65.63	$43.75	$43.75
Turbidity	Water	180.1	$50.00	$50.00	$37.50	$25.00	$25.00
RADIOCHEMICAL							
Gross Alpha/Beta	Soil/Water	900	N/A	N/A	N/A	$100.00	$87.50
	Soil/Water	9310	N/A	N/A	N/A	$100.00	$87.50
Radium Total Alpha-Emitting Radium Isotopes	Soil/Water	903	N/A	N/A	N/A	$175.00	$153.13
Radium Total Alpha-Emitting Radium Isotopes	Soil/Water	9315	N/A	N/A	N/A	$187.50	$164.06
Ra-226 by radon emanation	Soil/Water	903	N/A	N/A	N/A	$187.50	$164.06
	Soil/Water	9315				$200.00	$175.00
Ra-228	Soil	904				$200.00	$175.00
	Water	904	N/A	N/A	N/A	$187.50	$164.06
	Soil	9320				$ -	$ -
	Water	9320	N/A	N/A	N/A	$187.50	$164.06
Radon, Liquid Scintillation	Soil	SM 7500-Rn					

PARAMETER	MATRIX	METHOD	TURNAROUND TIME				
			24 HOUR	48 HOUR	72 HOUR	7 DAY	14 DAY
Radon, Liquid Scintillation	Water	SM 7500-Rn	N/A	N/A	N/A	$175.00	$164.06
Carbon-14, Liquid Scintillation	Soil/Water	NA	N/A	N/A	N/A	N/A	$218.75
Tritium Liquid Scintillation	Soil/Water	906	N/A	N/A	N/A	$150.00	$131.25

SUMMA CANISTER (COST PER CAN)	INDIVIDUAL CERTIFICATION	BATCH CERTIFICATION	FLOW VALVE REGULATOR	
1 Liter	$56.26	$ -	$31.25	
6 Liter	$56.25	$ -	$31.25	

GEOPHYSICAL/GEOTECHNICAL PARAMETERS	METHOD	COST PER SAMPLE
Atterberg Limits	ASTM D4318	$ 78

Plasticity Index		$ 78
Compaction (Standard Proctor)		$ 170
Sieve Analysis (unwashed)	ASTM D422	$ 90
Sieve Analysis (washed over #200 sieve)	ASTM D422	$ 42
Sieve Analysis (passing #200 sieve only)	ASTM D422	$ 54
Permeability/Hydraulic Conductivity (falling-head)	ASTM D5084	$ 225
Permeability/Hydraulic Conductivity (constant-head)	ASTM D2434	$ 154
Soil Bulk Density	ASTM D2937	$ 78
Particle Density	ASTM D854	Incl w/ soil bulk dens
Porosity (total)		$ 12
Porosity (air filled)		$ 12
Porosity (water filled)		$ 12
Soil Classification (USCS)		$ 160
Moisture Content	ASTM D2216	$ 12
Soil pH		$ 30
Total Organic Carbon	ASTM D2974	$ 44
Specific Gravity	ASTM D854	$ 44

3.2 Mobile Laboratory

Mobilization costs shall be per mile from the official station of the equipment. Mobilization costs shall further include all associated costs with transporting the equipment and operator/crew to and from the site. No separate staff hours or other expenses will be paid for mobilizing to and from the sites. Local mobilization+ (50 miles or less) shall be a lump sum amount.

Line item costs associated with on-site analytical work are for labor and analysis only and do not include sample collection costs which are covered elsewhere in the contract.

MOBILIZATION	STATION LOCATION	COST PER MILE	LUMP SUM+ Per Day	LUMP SUM+ Per Week
Mobile Laboratory	Salina, KS	$ 2.30	$ 230	$ 230

ANALYTICAL TECHNOLOGY	COST PER HOUR	COST PER DAY	COST PER WEEK
Gas Chromatograph	$ 138	$ 1265	$ 6325
Gas Chromatograph/Mass Spectrometer	$ 196	$ 1553	$ 7762

3.2 Other Analysis

Costs associated with other analytical technologies will be project specific. Please refer to Sections 6

through 8 for a list of additional analytical items.

4. Investigation and Well Installation

Vendors shall utilize equipment with specifications to complete work in an efficient manner. Failure to perform effectively will jeopardize future work requests. Vendors must define the equipment type and information related to equipment capabilities. If the Vendor has multiple pieces of equipment with similar performance capabilities (e.g., rigs) with differing rates, each piece of equipment should be its own line time and additional sheets may be provided as necessary.

Supplemental field activities (e.g., aquifer testing, geophysical surveys, etc.) not listed in the below line items may be expanded by KDHE depending on site requirements. Additional tasks requested by KDHE will be reimbursed at cost plus the applicable surcharge rates described above in Section 2.

4.1 Mobilization

Mobilization costs shall be per mile from the official station of the equipment. Mobilization costs shall further include all associated costs with transporting the equipment and operator/crew plus one support vehicle to and from the site. No staff hours or other expenses will be paid for mobilizing to and from the sites. Local mobilization+ (50 miles or less) shall be a lump sum amount.

EQUIPMENT TYPE	STATION LOCATION	COST PER MILE	LUMP SUM+ Per Day	LUMP SUM+ Per Week
Auger Boring Rig	Lawrence, KS	$ 3.50	$ 325	$ 400
Air Rotary Rig	Olsburg, KS	$ 6.75	$ 675	$ 3100
Mud Rotary Rig	Olsburg, KS	$ 6.75	$ 675	$ 3100
Direct Push	Lawrence, KS	$ 3.00	$ 250	$ 350

Note: Include city and state if not located in Kansas

4.2 Subsurface Drilling

Subsurface drilling costs shall be per foot and must include labor, completion of soil borings, decontamination, subsidiary equipment and supplies, associated soil sampling; discrete or continuous, on-site disposal of investigation derived waste and off-site disposal of clean drilling media.

DRILLING EQUIPMENT	BORINGS ≤ 75 FEET COST PER FOOT	BORINGS > 75 FEET COST PER FOOT
Auger Rig		
Discrete sampling at specified intervals	$ 14	$ 15
Continuous soil sampling	$ 14	$ 15
w/o soil sampling	$ 13.50	$ 14.50
Air or Mud Rotary Rig		
Soil samples collected from drill cuttings	$ 18	$ 16
w/o soil sampling	$ 18	$ 16

4.3 Direct Push

Direct push costs shall be a lump sum amount. Investigation utilizing direct push methods may include collection and screening of groundwater samples, soil gas survey (e.g., post-run tubing vapor sampling, etc.), and/or collection of continuous or discrete soil samples. Direct push equipment costs must include rig, rods, decontamination, labor, on-site disposal of investigation derived waste or off-site disposal of clean drilling media, and any other sampling equipment or supplies necessary to complete tasks.

DIRECT PUSH EQUIPMENT	LUMP SUM	
	PER DAY	PER WEEK
Direct Push Sampling Equipment	$ 1700	$ 7000
Electrical Conductivity Probe	$ 2475	$ 12375
Membrane Interface Probe	$ 2750	$ 13750
Hydraulic Profile Tool	$ 2750	$ 13750
Laser Induced Fluorescence (LIF)	$ 2750	$ 13750
Soil Vapor Implant per well*	$ 210	NA

* - *optional*

4.4 Monitoring Well Installation

All monitoring well installation costs shall be per foot based on inside diameter of the well and must include all blank casing, screen, gravel pack, annular seal, grout, other installation costs, labor, and disposal of investigation derived waste.

Micro-well/piezometer installation assumes installation of a 2” inside diameter prepack or micro-monitoring well/temporary piezometer using direct push technology. Installation costs for this line item must include probing, casing, screen, gravel pack, annular seal, grouting, and labor.

	COST PER FOOT		
WELL INSTALLATION	1” ID WELL	2” ID WELL	4” ID WELL
Auger Drilling	$ 13	$ 14	$ 20
Air Rotary Drilling	$ 13	$ 14	$ 26
Mud Rotary Drilling	$ 13	$ 14	$ 26
Micro-well/Piezometer	$ 13	$ 14	NA

Note: KDHE may request larger diameter well installations based on site requirements; however, all cost inclusions will still apply.

4.4.1 Monitoring Well Completion

Well completion costs shall be per well and must include monitoring well pad, appropriate vault, water tight j-plug, locking protective cover for above-grade completions, completion of WWC-5 forms, labor, and disposal of investigation derived waste. Separate lines items should be provided for above-grade and flush-mount completions. KDHE may request a metal frame form left in place be used to protect well pads in high traffic areas and/or protective bumpers (bollards) be installed to protect above-grade completions. Line items cost for protective bollards must include a high-visible yellow or orange paint and installation.

MONITORING WELL COMPLETION PER WELL	ABOVE-GRADE	FLUSHMOUNT

1" ID Monitoring Well	$ 160	$ 160
2" ID Monitoring Well	$ 160	$ 160
4" ID Monitoring Well	$ 350	$ 350
Protective Bollards (3 per well completion)	$ 130	NA
Metal Protective Frame for Well Pad	$ 175	$ 175

Note: KDHE may request larger diameter well completions based on site requirements; however, all cost inclusions will still apply.

4.4.2 Monitoring Well Development

All wells must be properly developed no less than 24 hours after completion. Well development shall involve removal of at least the amount of any water added during the drilling and installation activities plus five times the well volume. The well volume is considered to be, for development purposes, the volume of standing water within the well casing, and the volume within the filter pack with an assumed porosity of 30%. Well development requires surging or agitating water within the screened interval to affect development of the filter pack and any formation skin by pumping rapidly and intermittently at various depths within the screened interval using a downhole pump, use of a surge block or bailer, and/or air-lift pumping; other development methods may be approved by KDHE on a site-specific basis. Well development costs shall be per well and must include all labor, necessary equipment to complete the task, and disposal of development water.

WELL DIAMETER	COST PER WELL	
	BORINGS ≤ 75 FEET	BORINGS > 75 FEET
1" Well	$ 75	$ 100
2" Well	$ 80	$ 110
4" Well	$ 100	$ 200

Note: KDHE may request larger diameter well development based on site requirements; however, all cost inclusions will still apply.

4.5 Soil Boring/Monitoring Well Plugging, Abandonment, and Repairs

Soil borings and monitoring wells will be plugged and properly abandoned in accordance with K.A.R. 28-30-7. Soil boring/monitoring well plugging costs shall be per foot and must include labor and all plugging materials and equipment necessary to permanently plug the boring or well. Monitoring well abandonment costs shall be per well and must include all necessary labor and equipment to remove the wellhead, pad, and all related materials down to the required depth of three feet, soil and debris handling, restoration, and completion of WWC-5P forms. Separate lines items should be provided for paved and unpaved areas.

Monitoring well repair costs shall be per well and separate line items should be provided for paved and unpaved areas.

ACTIVITY	Cost		
Soil Boring Plugging - Per Foot	$ 5.50		
	1" ID WELL	2" ID WELL	4" ID WELL
Monitoring Well Plugging – Per Foot	$ 3.00	$ 3.50	$ 6.00
Monitoring Well Abandonment – Paved	$ 125	$ 125	$ 200

Surface – Per Well			
Monitoring Well Abandonment – Unpaved Surface – Per Well	$ 110	$ 110	$ 180
Removal/Replacement of Vault and Pad – Paved Surface – Per Well	$ 325	$ 325	$ 500
Removal/Replacement of Vault and Pad – Unpaved Surface – Per Well	$ 310	$ 310	$ 400
Replace Vault Lid – Per Well	$ 25	$ 25	$ 25

4.6 Disposal for Special or Hazardous Waste

Disposal costs associated with water and soil collected during soil boring or monitoring well drilling, well development, well purging, aquifer testing, excavation, groundwater sampling, and soil gas testing will be determined on a site-specific basis prior to actual disposal. The method and location must meet all applicable regulations and will require the approval of the KDHE Project Manager or Ordering Officer. The Vendor will be responsible for obtaining signatures for all disposal authorizations for disposal of wastes associated with these activities. Disposal costs will be based on cost plus the applicable surcharge rate discussed in Section 2 for subcontract or disposal facility pricing.

5. Geophysical Logging – Optional*

Vendors shall provide line items costs to perform geophysical logging. Line item costs must include all necessary equipment, supplies, decontamination, labor, all appropriate documentation and reporting requirements, field logs, etc., and any markup costs for subcontracting.

FIELD ACTIVITY	COST PER FOOT
0 – 50 feet below ground surface	$ Cost + 10%
51 – 100 feet below ground surface	$ Cost + 10%
101 – 200 feet below ground surface	$ Cost + 10%
> 200 feet below ground surface	$ Cost + 10%

6. MODULE A: State Response Programs (Excluding Storage Tanks)

Vendors shall provide line items costs for Sections 1 through 5 above and any additional equipment, resources, and field activities to complete tasks for state program requirements. Programs may be state or federally funded.

EQUIPMENT	COST PER DAY	COST PER WEEK	COST PER MONTH
Portable Air Stripper	$	$	$
Portable Carbon Vessel	$	$	$
Nitrate Screening Ion Selective Electrode	$	$	$
Chloride Screening Ion Selective Electrode	$	$	$

Property Research Tasks

TASK	COST
Chain of Title – Per Parcel	$
Lien and AUL Search – Per Property	$

7. Module B: Storage Tank Programs

Vendors shall provide line items costs for Sections 1 through 5 and any additional equipment, resources, and field activities to complete tasks per federal program requirements.

8. Module C: Risk Assessment

Vendors shall provide line items costs for performing risk assessment activities.

8.1 Labor

The Vendor shall state a firm, fixed price per hour for the following labor classifications:

- Professional 5 Associate Level (contract management, technical expert)
- Professional 4 Senior Level (senior project management, toxicologist, risk assessor)
- Professional 3 NA
- Professional 2 Project Level (project manager, mid-level toxicologist or risk assessor)
- Professional 1 Staff Level (junior toxicologist or risk assessor)
- Technical 4 Senior Technician
- Technical 3 Technician (environmental technician, remediation technician)
- Technical 2 Drafting/CAD (draftsman)
- Technical 1 Clerical

These rates shall be inclusive of all overhead charges, administrative costs and profit. Rates will be listed for actual staff employed by the Vendor at the time of the bid submission.

CLASSIFICATION	RATES PER HOUR			
	INITIAL 2 YEARS	OPTION YEAR 3	OPTION YEAR 4	OPTION YEAR 5
Professional 5	$	$	$	$
Professional 4	$	$	$	$
Professional 3	$	$	$	$
Professional 2	$	$	$	$
Professional 1	$	$	$	$
Technical 4	$	$	$	$
Technical 3	$	$	$	$
Technical 2	$	$	$	$

Technical 1	$	$	$	$

A statement of qualification shall be provided for each staff member associated with a particular classification(s). The official station location must also be defined for each staff member. For personnel and equipment mobilizations from out of state, reimbursement for travel time and mileage is expected to begin at the office closest to the site unless approved by KDHE.

KDHE shall reimburse on a "straight time" basis, therefore the Vendor should schedule to minimize overtime liabilities. The minimum time increment claimed for reimbursement shall be one quarter of an hour.

8.2 Per Diem

The Vendor shall state a firm, fixed price per diem for a single person as well as multi person drill crews. Lodging, food, and expenses shall be included in the per diem rate. Per diem is only applicable if an overnight stay is required. The per diem rate also applies to any subcontractors.

PER DIEM – PER DAY PER PERSON	$

There will be no labor charge for standby when it is necessary for a Vendor to remain on site, e.g., over the weekend. Per diem rates will be in effect. Timesheets indicating staff hours will be required if per diem is requested.

The use or rental of vehicles, equipment, materials, or other items necessary to complete the tasks will be reimbursed at cost plus the following surcharge rates. Cost associated with vehicle use or rental shall include all maintenance and insurance, as well as incidental fees. There will not be any additional mileage charge. Fuel used will be reimbursed at cost. A detailed invoice for all vehicles, equipment, materials, or other items used or rented must be submitted to KDHE for reimbursement consideration. A detailed receipt must also be submitted for any rented items.

SURCHARGE DESCRIPTION	SURCHARGE PERCENTAGE
Items less than $5,000	10%
Items between $5,000 and $25,000	8%
Items greater than $25,000	6%

Miscellaneous supplies and minor items of equipment are considered to be part of the Vendor's inventory to perform business and are not considered reimbursable.

ATTACHMENT B

Additional Federal Legal Requirements

ATTACHMENT B provides additional federal legal requirements that Contractors must follow if political subdivisions decide to utilize this contract per the Scope of Services section. Vendors must review and understand the information in this Attachment prior to stating if the pricing is available to political subdivisions in the State of Kansas.

B_1 - Requirements

B_2 - Certification - Anti-Lobbying Act of 1990

B_3 - Disclosure - Potentially Responsible Party Relationships

B_4 - Certification - Debarment, Suspension, and Other Responsibility Matters

B_1 - ADDITIONAL CONTRACT REQUIREMENTS - FEDERAL LEGAL

Purpose

This section provides additional federal legal requirements that Contractors must follow if KDHE Programs or political subdivisions using federal funding utilize this contract.

Lobbying and Propaganda

Subrecipients who request or receive from the grant recipient (KDHE) a subgrant, contract, or subcontract exceeding $100,000, at any tier under a federal grant shall comply with the Anti-Lobbying Act, Section 319 of Public Law 101-121, and file an Anti-Lobbying Certification form (Attachment B_2), and the Disclosure of Lobbying Activities form, if required, to the next tier above.

Minority and Woman-Owned Business Enterprise

The Contractor agrees to ensure to the fullest extent possible that a "Fair Share" of funds for subcontracts for supplies, construction, equipment or services, if utilized, is made available to organizations owned or controlled by socially and economically disadvantaged individuals, women, and historically black colleges and universities. The following "Fair Share" Minority Business Enterprise/Women's Business Enterprise (MBE/WBE) goals for Contractors in the State of Kansas have been approved: Supplies MBE 0.8%, WBE 4.1%, Equipment MBE 1.2%, WBE 3.9%, Service MBE 5.6%, WBE 35.0%, and Construction MBE 4.1%, and WBE 6.9%.

Good Faith Efforts

The Contractor agrees to utilize the following good faith efforts when awarding any subcontracts, if utilized, under this contract in accordance with Section 129 of Public Law 100-590, Small Business Administration Reauthorization and Amendment Act of 1988:

a. Place small businesses in rural areas (SBRA) on solicitation lists
b. Ensure that SBRAs are solicited whenever they are potential sources
c. Divide total requirements, when economically feasible, into small tasks or quantities to permit maximum participation by SBRAs
d. Establish delivery schedules, whenever the requirements of work will permit, that will encourage participation by SBRAs
e. Utilize the services of the Small Business Administration and the Minority Business Development Agency of the U.S. Department of Commerce, as appropriate
f. Require any contractor who awards subcontracts to take the good faith steps in subparagraphs a. through e. above of this condition.

Conflict of Interest

The Contractor is required to notify KDHE of any actual, apparent, or potential conflict of interest regarding any individual working on a contract assignment or having access to information regarding the contract. This notification shall include both organization conflicts of interest and personal conflicts of interest. If a personal conflict of interest exists, the individual who is affected shall be disqualified from taking part in any way in the performance of the assigned work that created the conflict of interest situation.

Disclosure of Potentially Responsible Party relationships

The Contractor must provide with its bid or proposal any financial and business relationship with any and all potential responsible parties of contaminated sites in the state (Attachment B_3).

Certification of Independent Price Determination

The Contractor must include with in its bid or proposal a certification of independent price determination. This document certifies that no collusion, as defined by Federal and State antitrust laws, occurred during bid preparation.

Debarment and Suspension

The prospective participants must certify by submittal of Certification Regarding Debarment, Suspension and Other Responsibility Matters, that to the best of its knowledge and belief that it and its principals are not presently debarred, suspended, proposed for debarment, declared ineligible or voluntarily excluded from covered transactions by any Federal department or agency. This form is attached as Attachment B_4.

Allowable Costs

The allowable costs of direct materials, supplies, services, and other costs shall be determined in accordance with 40 CFR, Subpart 31.22.

Audit and Access to Records

Audits and access to documentation requirements are discussed below.

The Contractor shall maintain books, records, documents, accounting procedures, policies, and other evidence in sufficient detail to properly reflect all costs claimed to have been incurred or anticipated to be incurred in the performance of this contract. KDHE, EPA, the U.S. Comptroller General, or their representatives will have the right to examine and audit this documentation. This right of examination shall include inspection at all reasonable times of the Contractor's facilities engaged in performing the contract.

KDHE, EPA, the U.S. Comptroller General, or their representatives will have the right to examine and audit all books, records, documents, and other Contractor data, including computations and projections, related to negotiating, pricing, or performing the contract or related modifications in order to evaluate the accuracy, completeness, and currency of the cost or pricing data. The right of examination shall extend to all documents necessary to permit adequate evaluation of the cost or pricing data submitted, along with the computations and projections used.

KDHE, EPA, the U.S. Comptroller General, or their representatives shall have the right to examine and audit books, records, other documents, and supporting materials for the purpose of evaluating (1) the information reported and (2) the effectiveness of the Contractor's policies and procedures to produce data compatible with the objectives of this documentation.

The Contractor shall make available at its office at all reasonable times the materials described in the preceding paragraphs for examination, audit, or reproduction until 10 years after final payment under this contract or for any shorter period mutually agreed upon and documented. The Contractor shall maintain records for the period of time specified in requirements regarding records retention or for any longer period required by statute or by other clauses of the contract.

If the contract is completely or partially terminated, records relating to the work terminated shall be made available for 10 years after any resulting final termination settlement.

Records relating to appeals, litigation, or the settlement of claims arising under or relating to the contract shall be made available until such appeals, litigation, or claims are resolved.

B_2 - ANTI-LOBBYING ACT OF 1990 - APPLICANT CERTIFICATION

This Certification is a material representation of fact upon which reliance was placed when this transaction was made or entered into. Submission of this Certification is a prerequisite for making or entering into this transaction imposed by Section 1352, Title 31, U.S. Code. Any person who fails to file the required Certification shall be subject to a civil penalty of not less than $10,000 and not more than $100,000 for each such failure.

The undersigned certifies to the best of his or her knowledge and belief, that:

(1) *No federal appropriated funds have been or will be paid, by or on behalf of the undersigned, to any person for influencing or attempting to influence an officer or employee of any agency, a Member of Congress, an officer or employee of Congress, or an employee of a Member of Congress in connection with the awarding of any Federal contract, the making of any Federal grant, the making of any Federal loan, the entering into of any cooperative agreement, and the extension, continuation, renewal, amendment, or modification of any Federal contract, grant, loan, or cooperative agreement.*

(2) *If any funds other than Federal appropriated funds have been paid or will be paid to any person for influencing or attempting to influence an officer or employee of any agency, a Member of Congress in connection with this Federal contract, grant, loan, or cooperative agreement, the undersigned shall complete and submit Standard Form-LLL, "Disclosure of Lobbying Activities, "in accordance with its instructions*.

(3) *The undersigned shall require that the language of this certification be included in the award documents for all subawards at all tiers (including subcontracts, subgrants, and contracts under grants, loans, and cooperative agreements) and that all subrecipients shall certify and disclose accordingly.*

_____ _____

Signature of Authorized Representative Date

B_3 - DISCLOSURE REGARDING

POTENTIALLY RESPONSIBLE PARTY RELATIONSHIPS

The prospective Contractor certifies to the best of its knowledge and belief that:

a) It has disclosed any financial and business relationship with any and all potential responsible parties of contaminated sites in the state and with the Contractor's parent companies, subsidiaries, affiliates, subcontractors, or current clients and such information is attached to this form. This disclosure requirement includes past financial and business relationships, including services related to any proposed or pending litigation with such parties.

or

b) no such information exists

and

c) Contractor shall disclose immediately any such information discovered after submission of its bid or proposal or after award.

▮ Disclosure information is attached

▮ No such information exists

▮ I am unable to certify to the above statements. My explanation is attached.

_____

Typed Name & Title of Authorized Representative

_____ _____

Signature of Authorized Representative Date

B_4 - CERTIFICATION REGARDING DEBARMENT, SUSPENSION, AND OTHER RESPONSIBILITY MATTERS

The prospective participant certifies to the best of its knowledge and belief that it and its principles:

(a) Are not presently debarred, suspended, proposed for debarment, declared ineligible, or voluntarily excluded from covered transactions by any Federal department or agency:

(b) Have not within a three year period preceding this proposal been convicted of or had a civil judgement rendered against them for commission of fraud or a criminal offense in connection with obtaining, attempting to obtain, or performing a public (Federal, State or local) transaction or contract under a public transaction; violation of Federal or State antitrust statutes or commission of embezzlement, theft, forgery, bribery, falsification or destruction∗ of records, making false statements, or receiving stolen property;

(c) Are not presently indicted for or otherwise criminally or civilly charged by a government entity (Federal, State, or local) with commission of any of the offenses enumerated in paragraph (l)(b) of this certification: and

(d) Have not within a three-year period preceding this application/proposal had one or more public transactions (Federal, State, or local) terminated for cause or default.

I understand that a false statement on this certification may be grounds for rejection of this proposal or termination of the award. In addition, under 18 USC Sec. 1001, a false statement may result in a fine of up to $10,000 or imprisonment for up to 5 years, or both.

_____

Typed Name & Title of Authorized Representative

_____ _____

Signature of Authorized Representative Date

I am unable to certify to the above statements. My explanation is attached.

ATTACHMENT C

Standard Monitoring Well Design

ABOVE GRADE MONITORING WELL DESIGN

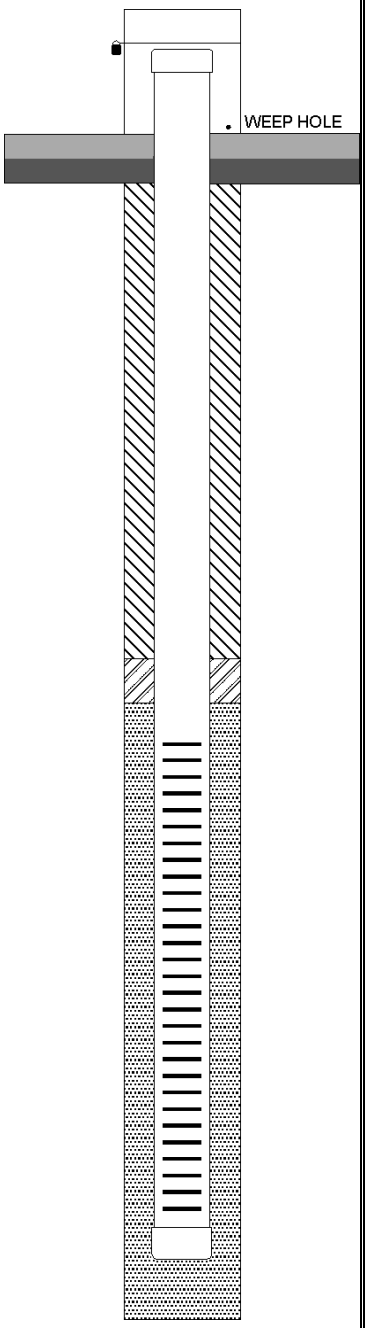

WELL HEAD PROTECTOR

Steel or PVC cover with water tight cap, set in the concrete pad. Should be equipped with a locking device to prevent tampering. Cover should provide adequate space to allow access to the well.

CONCRETE PAD

Shall be a minimum of 2'x2'x4" thick to secure the protective cover, prevent pooling of water and vegetative growth around the well, and allow for placement of a surveyor pin. ***In addition, protective well pads in traffic areas may require use a metal frame form that will be left in place to help protect the concrete pad. The well # shall be neatly scribed into the well pad in 3 to 5-inch letters/numbers.***

IMPERVIOUS GROUT

The upper 20' of the well must be grouted with impervious grout as required by K.A.R. 28-30-2k and 6b (see next page for quotes)

SCREEN SEAL

A 2 foot layer of bentonite chips or pellets should be placed on the gravel pack to prevent infiltration of grout into the gravel pack. The bentonite must be thoroughly hydrated prior to placement of grout.

GRAVEL PACK

The gravel pack should be sized to prevent infiltration of fines into the well. The source of the gravel pack material should be carefully determined to eliminate the possibility of contamination of the well during construction.

WELL CASING

Well casing shall terminate not less than one foot above ground surface. The following well casings are acceptable for monitoring well use.

2" I.D. PVC schedule 40 or thicker

4" I.D. PVC SDR 26 or thicker

5" I.D. PVC SDR 26 or thicker

Steel casing shall be 10 gauge or thicker

All casing materials must be connected without use of solvents, glues, or materials that would induce contamination into the well.

Some other casings are approved for well construction but are not as commonly used. All casing materials must be selected so that incompatibility problems do not occur.

SCREEN

Wells must be equipped with manufactured well screen that provides adequate communication with the aquifer to provide a representative sample without allowing the sediments to enter the well.

CONTRACTOR LICENSING

All monitoring wells must be constructed by a licensed water well contractor as specified under KDHE regulations K.A.R. 28-30-2 through K.A.R. 28-30-6 and K.A.R. 28-30-200.

FLUSH-MOUNT WELL CONSTRUCTION DETAIL

Two-inch ID Well

(Not to Scale)

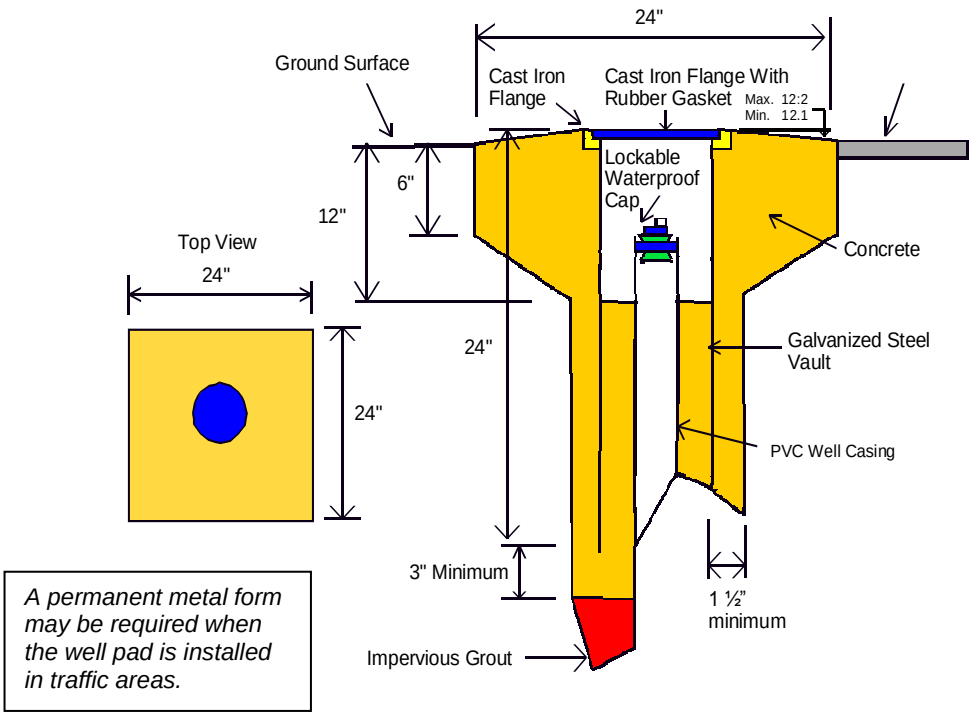

A permanent metal form may be required when the well pad is installed in traffic areas.

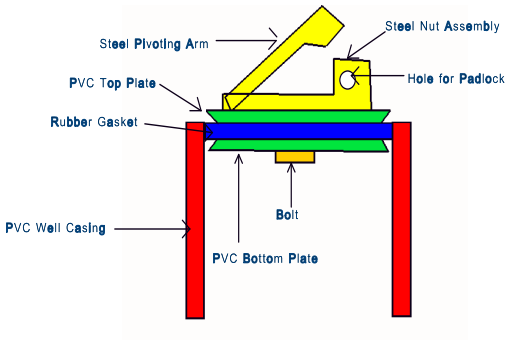

Lockable Waterproof Cap

(Not to Scale)

BER Locking Tag

ATTACHMENT D

Drilling and Direct Push Probe Procedures
Sampling, Logging, and Well Installation

NOTE: The procedures are primarily specified for Module A. Module B will follow many of these same requirements, but the Vendor should rely on the Storage Tanks Program standard Request for Proposals (RFP) for the specific tasks *(e.g. Petroleum Storage Tank Release Trust Fund, Limited Sites Assessment, Request for Proposal, Revision 11).* The Module B program-specific standard RFPs can be found on the Storage Tank Program web site at: http://www.kdheks.gov/tanks/rfp/index.html.

ATTACHMENT D

Drilling and Direct Push Probe Procedures

Sampling, Logging, and Well Installation

Drilling, direct push probing, soil sampling and monitoring well installation efforts will vary based on site-specific conditions. Direct push probing is the preferred method for collection of soil and groundwater samples during assessment or investigative activities. When geologic and/or hydrogeologic conditions exist that prevent the use of direct push technology, each boring should be drilled using hollow stem augers (HSA) or other KDHE-approved drilling methods. The Vendor should note that consolidated strata (limestone, shale, sandstone, etc.) might be encountered while drilling the soil borings and monitoring wells. The method of probing or drilling chosen must be able to achieve the necessary depths without inducing the migration of contamination or diluting the contamination concentration. The Vendor must provide a description of the probing and drilling methods and type of equipment to be used.

D1.1. **Subsurface Drilling**: The Vendor shall be capable of performing subsurface drilling.

D1.1.1. A State of Kansas licensed water well contractor must complete all drilling under this contract. The Vendor is responsible to assure any and all subcontractors meet this requirement. A project geologist who is experienced in drilling, recording subsurface lithology from drill cuttings and conducting hydrogeologic tests must be on site and oversee all drilling and hydrogeologic testing activities.

D1.1.1.1. The Vendor shall have the capability of unconsolidated and bedrock drilling or deep drilling with hollow-stem auger, mud rotary, air rotary, sonic, and direct push methods. The KDHE Project Manager will specify or approve the number of boreholes to be advanced on a site-specific basis. The KDHE Project Manager must approve the addition of water for drilling purposes.

D1.1.2. The Vendor shall have the capability of obtaining subsurface soil samples with split spoon, Shelby tube, or continuous sampling/coring device. The frequency of sample/core collection will either be specified by the KDHE Project Manager or proposed by the Vendor subject to KDHE Project Manager approval. The need for a subcontractor must be defined by the Vendor including the name, qualifications, and complete description of drilling equipment (rig type and manufacturer) and drilling capabilities of the subcontractor.

D1.1.2.1. When a drill rig is utilized, HSA technology shall be the default method used for delineating the extent of soil contamination unless a consolidated layer is encountered or the depth of soil contamination is greater than the capabilities of the rig. The drill rig must be capable of drilling at least 90 feet in unconsolidated material with 4.25-inch ID HSAs.

D1.1.2.2. Core and soil samples must be classified using the Unified Soil Classification System (USCS), following the methods outlined in the most current version of ASTM Standard D 2488.

D1.1.2.3. For bidding purposes, standard frequency of sample/core collection is discrete sampling every five feet or distinctive change in lithology, whichever is less, for depths to 75 feet and discrete sampling on 10-foot intervals for depths greater than 75 feet in Module A and 50 feet in each case for Module B.

D1.1.2.4. Soil samples obtained during the drilling may be subjected to approved screening technologies at specific sites as directed by the KDHE Project Manager. Screening technologies may include, but not be limited to: photoionization device (PID) screening for compounds with appropriate ionization potentials; Draeger Tubes; field gas chromatograph (GC) with PID (GC/PID), electron capture detector (GC/ECD) or mass spectrometer (GC/MS); immuno-assay kits for PCBs, pesticides/herbicides, SVOCs, or other constituents; appropriate field screening methodologies for inorganics (mainly chloride and nitrate); and X-ray fluorescence (XRF) for metals. Other field screening methods may be submitted for approval. The specific types,

techniques, and methods for sample screening should be proposed by the Contractor and approved by the KDHE Project Manager.

1.1.2.4.1. The Vendor will be responsible for compliance with all KDHE licensing, training, health monitoring and documentation requirements for use of an XRF with a sealed radioactive source or X-ray tube device.

1.1.2.4.2. Headspace analysis using approved field testing equipment must be conducted by filling a clean glass quart jar or quart plastic bag half full of the sample to be analyzed, seal the jar or bag and let it stand until the sample reaches 70 degrees F for a minimum of 15 minutes (allowing volatilization to occur) and a maximum of 60 minutes prior to testing. Jars must be decontaminated and dried before reusing. Plastic bags cannot be reused.

D1.1.3. Field GC Confirmation Rate: The rate of laboratory confirmation for samples analyzed by a field GC shall be 20% unless otherwise approved by the KDHE Project Manager. The lab confirmation sample compares a fixed lab analysis result to the field GC analytical result.

D1.1.4. The specific methods for characterizing, field screening/analysis, containerizing and disposing of investigative-derived waste (IDW) should be proposed by the Vendor for KDHE approval.

D1.2. **Monitoring Wells**: The Vendor shall have the capability of completing monitoring wells by a process that will not threaten the integrity of any samples obtained from the well.

D1.2.1. The Contractor or their subcontractor must have the capability of installing 1-, 2-, 4-, 6-, 8-, 10-, and 12- inch inside diameter wells in accordance with approved drilling methods. The drilling technique must be in site-specific work plans that will be approved by the KDHE Project Manager. Wells greater than 4-inch ID will be bid on site-specific basis.

D1.2.2. Well casing must be Schedule 40 or Schedule 80, for well depths greater than 100 feet below ground surface, PVC and flush joint threaded connections or be secured by stainless steel screws, unless otherwise approved by KDHE. In no case shall primers, solvents or glues be used that will contaminate the wells.

D1.2.3. Well screens must be machine-slotted PVC with slot size appropriate for specified application. Stainless steel manufactured screens may be required for some applications, but will be bid on an application-specific basis. Stainless steel centralizers will be installed for wells with casing/screen diameters larger than 4-inch. Centralizers will be installed at a minimum of every 20 feet along the well casing.

D1.2.4. Although an estimated or approximate depth to groundwater has been provided, the Vendor will be fully responsible for determining the actual depth to groundwater and completing the well(s) to the appropriate depth and in the appropriate lithology according to their intended purpose. It is the responsibility of the Field Geologist to complete and screen all wells properly. Any questions concerning well completion or any deviation in depth to groundwater and or lithology must be brought to the attention of the KDHE P.M. prior to well installation. Failure to properly locate the wells, screen the wells in the correct interval, construct and complete the wells, and/or screen the wells in the correct lithology will result in the Vendor having to replace the wells at their expense.

D1.2.5. Wells must be completed according to KDHE regulations K.A.R. 28-30-2 through K.A.R. 28-30-6 and K.A.R. 28-30-200. Once monitoring wells are completed, the Contractor, or their subcontractor, must complete accurate logs of the geologic condition encountered during well construction. See the table near the end of this section for boring log requirements. KDHE's WWC-5 forms must be completed and submitted to KDHE within a reasonable timeframe.

D1.2.6. All wells must be properly developed no less than 24 hours after completion. Well development shall involve removal of at least the amount of any water added during the drilling and installation activities plus five times the well volume. The well volume is considered to be, for development purposes, the volume of standing water within the well casing, and the volume within the filter pack with an assumed porosity of 30%. Well development requires surging or agitating water within the screened interval to affect development of the filter pack and any formation skin by pumping rapidly and intermittently at various depths within the screened interval using a downhole pump, use of a surge block or bailer, and/or air-lift pumping; other development methods may be approved by KDHE on a site-specific basis. Vendors must complete a Well Development Form to document well development activities and provide the form to KDHE in the applicable report. Well completion and development should be documented as noted in the table near the end of this section.

D1.2.7. All monitoring wells and remedial wells must be securely covered until completed. The Vendor will be responsible for replacing wells damaged prior to completion.

D1.2.8. The Vendor will be responsible, at their expense, for replacing wells that are constructed incorrectly, inadequately developed, and or improperly located.

D1.2.9. Monitoring wells shall be secured using single-use KDHE locking tags as appropriate for each KDHE program. The KDHE locking tags are individually numbered and a supply of the tags will be provided to the Vendor by KDHE. An example of the black tag is shown at the end of this section and on the Attachment C - Flush Mount Well Construction Details page.

D1.2.10. The Vendor shall be responsible for proper plugging of any borings, perforations or test holes left as a result of the monitoring well and boring installation or groundwater screening in accordance with K.A.R. 28-30-2 through K.A.R. 28-30-6 and K.A.R. 28-30-200.

D1.2.11. A **Professional Geologist** shall stamp and sign reports summarizing well installations, verifying that all the above drilling and sampling procedures were followed as specified.

D1.3. **Geophysical**: Geophysical logging tools are to be advanced at locations and depths when approved by the KDHE Project Manager. The KDHE Project Manager must approve the type and technology of geophysical logging tools. The KDHE Project Manager will also approve the number of boreholes to be advanced with continuous geologic logging for correlation purposes.

D1.3.1. For unconfined/unconsolidated shallow applications, the Vendor may utilize a direct push hydraulic unit (or equivalent) to advance a subsurface conductivity/electric logging, or other KDHE-approved logging tool, to the depth specified by the KDHE Project Manager or refusal.

D1.3.2. Each subsurface imaging survey shall provide real-time display of conductivity versus depth and probing speed versus depth. A hard copy of the displays (graph) shall be provided in the field. The graph will be compared to existing geologic well logs, if available, to calibrate the conductivity logs.

D1.4. **Direct Push Sampling**: The Vendor shall have the capability of completing discrete-sampling for soil gas, surface/subsurface soil and/or ground water screening surveys using direct-push methodology.

D1.4.1. Each probe shall be driven to a depth as approved by the KDHE Project Manager. The proposal must include a complete description of the direct-push/probe driving methods and equipment that will be available, and probing depths commonly attained by the Vendor in unconsolidated sediment at Kansas sites. For the purposes of this RFP, one probe is provided each time the probe operator must remove the soil probe tip from the borehole. Therefore, one groundwater or soil gas probe is considered a single location from which multiple groundwater samples (different depths) can be collected (e.g. 3 sample depths within 1 borehole = 1 probe). One soil boring may be multiple probes depending on the number of samples collected per location since the operator must trip out of the borehole to remove each soil sample (e.g. 2 sample depths within 1 borehole = 2 probes).

D1.5. **Decontamination**: The Vendor shall ensure all equipment has been thoroughly decontaminated prior to arriving onsite and initiating activities. Thorough decontamination must continue to be performed prior to the installation of each soil boring, monitoring well, and prior to the collection of samples to insure representative results.

D1.5.1. Prior to use in any of the above described investigative techniques and between each sampling location, all equipment must be washed with a biodegradable detergent, followed by rinsing with potable water and/or deionized water as approved by the KDHE Project Manager.

D1.5.2. All equipment, tools, and pipe used in borings, soil gas sampling, or wells must be free of any visible dirt, oil, grease, or other visible contamination.

D1.5.3. If NAPL is encountered during a subsurface investigation, all equipment contacted must be cleaned until deemed adequate by Vendor's on site representative.

D1.5.4. Rinse water used for decontamination must meet at least one of the following criteria:

D1.5.4.1. It must be from a water supply known to be free of the contaminants of concern.

D1.5.4.2. It must be from a source having known levels of the contaminants of concern below regulatory criteria and a sample of the water must be preserved for analysis for those contaminants.

D1.5.4.3. In the event that rinse water of unknown quality is used, a final rinse of the tools and equipment must be performed using a pressure sprayer with distilled water.

The boring log and well completion documents shall include, but not be limited to the information noted below:

Boring Log

- Project name and KDHE project number
- Site location
- Geologic Log
- Field screening results
- Soil characteristics, if applicable
- Vertical scale
- Depth to groundwater
- Date of drilling
- Rig type
- Company and driller's name
- Boring/well location information for assisting on-site locating (e.g. 52' N and 13' W of intersection of 12th and Main or gps coordinates)

Well Completion

- Project name and number
- Site location
- Well identification
- Ground surface elevation
- Well construction (riser, screen, material, etc.)
- Depth to top of screen
- Top of casing elevation
- Total depth of well
- Static water level elevation
- Date of static water level measurement

KDHE BER Locking Tag

ATTACHMENT E

KDHE Laboratory Certification Explanation

EXPLANATION OF THE LABORATORY ACCREDIATION

Laboratories applying for KDHE accreditation must list the fields of accreditation (matrix, methods, and analyte(s)) for which they are requesting in the application provided by KDHE. KDHE evaluates the laboratory's personnel qualifications, quality manuals, equipment procedures, quality control, etc. used by the laboratory for the fields of accreditation for which the laboratory seek accreditation. The laboratory is granted accreditation if it meets all of KDHE's regulatory requirements. Applications for laboratory accreditation and KDHE requirement may be downloaded from the KDHE website at www.kdheks.gov/envlab.

KDHE issues a certificate including the issued date, the expiration date, and the fields of accreditation list to each accredited laboratory. The fields of accreditation list include the matrix/matrices, method(s), and analyte(s) for which the laboratory has been accredited. For example, a laboratory could be accredited for non-potable water and solid matrices by method 8260 for volatile organic compounds such as benzene, toluene, etc. If a field of accreditation is not listed, the laboratory is not accredited by KDHE for that field. It is not enough to ask a laboratory if it is accredited. There are many laboratories that are accredited for only a single test. Make sure that the laboratory you specify for a project is accredited for: 1) the analyte(s) you require, 2) the method(s) you are bidding, and 3) the type of matrix/matrices you will be testing.

The list of accredited laboratories is updated daily and may be found on the KDHE website at http://www.kdheks.gov/envlab/disclaimer.html.

Attachment F

Forms

- F1 - Utility Clearance Checklist
- F2 - Equipment Daily Log – PDF format
- F3 - Certificate of Completion - Remediation Installation
- F4 – Well Development Form – Example

KANSAS DEPARTMENT OF HEALTH & ENVIRONMENT
BUREAU OF ENVIRONMENTAL REMEDIATION

UTILITY CLEARANCE CHECKLIST

This document must be completed in its entirety and submitted to the appropriate Project Manager before any intrusive event such as drilling, excavation or probing may be performed by any entity executing work orders generated by the Kansas Department of Health & Environment, Bureau of Environmental Remediation. Completion of this form is mandatory for each separate event if substantial distances separate subsurface activities.

Failure to complete and submit this document before work is performed will preclude agency approval of the work and will transfer all liability associated with damages to the contractor or and/or subcontractors. If it is determined a specific utility is not in the area of the project, please indicate this in the company/contact person column. If there are additional utilities that require clearance in the area, please indicate all necessary information and/or comments on the back of this page.

This document will also be completed by any KDHE/BER personnel who undertake such activities using agency or contracted equipment.

I, _____, hereby attest that I have contacted the following companies/municipalities.

Purpose / description of work: Name of facility _____

_____ Address / location of facility _____

_____ Site ID# (if applicable) _____

Dig Safe* _____ (initial if called) Date Called _____ Ticket Number(s) _____

Utilities Covered:

Company/ Contact	Were Utilities Cleared?		Did you observe utility clearance?		Initial	
Natural Gas_____	____yes	____no	____yes	____no	Date_____	_____
_____	____yes	____no	____yes	____no	Date_____	_____
Telephone _____	____yes	____no	____yes	____no	Date_____	_____
_____	____yes	____no	____yes	____no	Date_____	_____
Cable TV _____	____yes	____no	____yes	____no	Date_____	_____
Electric _____	____yes	____no	____yes	____no	Date_____	_____
_____	____yes	____no	____yes	____no	Date_____	_____

Municipalities:

	Contact Person						
Sanitary Sewer	_____	____yes	____no	____yes	____no	Date_____	_____
Public Water	_____	____yes	____no	____yes	____no	Date_____	_____
Storm Sewer	_____	____yes	____no	____yes	____no	Date_____	_____

Other:

	Company						
Fiber Optic Cable	_____	____yes	____no	____yes	____no	Date_____	_____
Pipeline (specify)	_____	____yes	____no	____yes	____no	Date_____	_____

The information on this document is correct to the best of my knowledge:

signed_____ date:_____

* Dig safe does not cover all utility companies. It is the responsibility of the on-site Project Manager to insure all companies with utilities in the area are contacted. Private utility locates may be needed if warranted by site-specific conditions.

REV. 12/4/96

FIELD EQUIPMENT LOG

Project Name: _____

Project No.: _____

Date(s): _____

Field Staff Signature(s): _____

Vehicles	Start Mileage	End Mileage	Date	
Equipment	Equip I.D.	Date Out	Date In	Condition/Comments
Organic Vapor Analyzer				
Photoionization Detector				
Turbidity Meter				
Portable Air Stripper				
Portable Carbon Vessel				
Well Sampling Equipment				
Generator				
Pressure Washer				
Portable Light Array				
Poly Storage Tank				
Drums				
Other				
Other				
Other				

SAMPLE

Certificate of Completion

For

Remedial System Installation

The following Certification of Completion is provided to satisfy the requirements outlined under the Corrective Action Scope of Work requirements.

Professional Engineer Certification

I certify that I have personally examined and am familiar with the engineering information presented in the KDHE approved remedial design/plan, equipment substitutions listed in the remedial installation report/as-built document, project specification testing requirements, any and all modifications made during installation upon completion of a thorough inspection of the system. Based on my inquiry of those individual(s) responsible for the remedial system installation or those persons directly responsible for gathering installation verification testing results (e.g. soil compaction, air tightness piping, pipe survey, other testing requirements), the information submitted is to the best of my knowledge and belief, true, accurate, and complete. Therefore, I am satisfied that the installation of the remedial system at:

_____ ,
Kansas

has been performed in accordance with the KDHE-approved design or have provided a complete list of discrepancies from the approved design implemented under my oversight. Attached are copies of remedial system verification testing results required by the approved design specifications, if applicable.

_____ _____
(Signature) (Date)

_____
(Printed Name)

_____
(Kansas Professional Engineer License No.)

_____

_____
(Business Address)

_____
(Telephone Number)

(Seal)

Well Development Form

Project Name:

Well Number:

Project Location:

Elevation of Well:

Ground Surface Elevation (GS):

Well Information

Date Well Installed:

Top of Casing Elevation(TOC):

Total Depth of Well: feet from

Depth to Top of Screen: feet from

Length of Casing Screened: feet

Type of Formation Screened:

Well Volume Calculation:

(5xWell Volume)+ 3xAmt H20 added

Well Development Method:

Equipment:

Surge		Bail	
Airlift		Pump	

Method Description:

Date	Time	Depth to Water * (ft)	Total Depth * (ft)	Total	Temp. (degrees F)	pH (units)	S.C. (µS/cm)	Turbidity (NTU)

* From TOC

ATTACHMENT G

KDHE Ordering Officers

KDHE Ordering Officers

KDHE Ordering Officers shall be the only persons with authority to issue work request contract awards under this contract. Changes must be submitted in writing from KDHE.

KDHE Ordering Officers

Status as of: Contract Start Date

Module A – State Cleanup Programs (excluding Tanks)	Module B – Storage Tanks Program	Module C - Risk Assessments
Bob Jurgens	Randy Carlson	Chris Carey
Chris Carey	Roger Boeken	Bob Jurgens
Murray Balk	Stephanie Pfannenstiel	Randy Carlson
Randy Carlson	Leo Henning	Deanna Ross
Deanna Ross	Teresa Hattan	Ryan Weiser
Ryan Weiser		Gary Richards, Jr.
Gary Richards, Jr.		Joseph Dom
Kait Salley		Maura O'Halloran
Joseph Dom		Jorge Jacobs
Darryl Morgan		Maggie Weiser
Maura O'Halloran		Leo Henning
Maggie Weiser		Mostafa Kamal
Leo Henning		Teresa Hattan
Kent Schierkolk		
Mostafa Kamal		
Cathy Tucker-Vogel		
Teresa Hattan		

Contract Administrator – Teresa Hattan